Additel 282

Dual-Channel Reference Thermometer Readout

ADT282 Dual-Channel Reference Thermometer Readout

-------User Manual

[Version：2204V01]

Additel Corporation

STATEMENT

This user manual provides operating and safety instructions for the ADT282 Dual-Channel Reference Thermometer Readout. To ensure correct operation and safety, please follow the instructions in this manual. Additel Corporation reserves the right to change the contents and other information contained in this manual without notice.

Content

1. Introduction 5
1.1 General Introduction 5
1.2 Model and function 6
1.3 Technical Specification 6
1.3.1 General Technical Specifications 6
1.3.2 Technical Specifications of Signal Measurement (Environment Temperature: 20±10℃, 1 year accuracy) 9
1.3.3 RTD Measurement 9
1.3.4 TC Measurement 11
1.4 Basic Structure 15
1.5 Accessory 17
1.6 Power Supply 18
2. Display and functions 19
2.1 Main Display 20
2.2 Control center 20
3. Thermometer 22
3.1 Temperature Measurement 23
3.1.1 TC Measurement 23
3.1.2 TC Measurement Setup 24

3.1.3 RTD Measurement 25
3.1.4 RTD Measurement Setup 25
3.1.5 Filter 25
3.1.6 Zeroing 26
3.1.7 Statistics 27
4. System Settings 28
4.1 Bluetooth 28
4.2 Power Management 28
4.2.1 Display Brightness 28
4.2.2 Battery Information 28
4.2.3 Auto Backlight Off 28
4.2.4 Auto Sleep 29
4.2.5 Auto power off 29
4.3 Service 29
4.3.1 Calibration 29
4.3.2 Maintenance 30
4.3.3 Factory Reset 30
4.4 Personalization 30
4.4.1 System Sound 30
4.4.2 Language 31
4.4.3 Date & Time 31
4.5 About Product 32

5. Data Management 33
6. Applications 33
6.1 Temperature unit Converter 33
6.2 Thermal calculator 33
6.3 Sensor Library 33
6.4 Data Logger 33
6.4.1 Logger Management 34
6.4.2 The start of data logging 34
6.4.3 The operation of data logging 35
6.4.4 Save the data 37
6.5 Differential Temperature 37

Safety Instructions

Warning:

To prevent the user from injury, please follow this user manual for use.

To prevent possible fire, electric shock or personal injury, please do as follows:

1. General:

- Please read the user manual carefully before using the product, especially the “safety instruction”;
- Please charge the battery when the low battery is displayed, to prevent incorrect measurement;
- Please do not put the product in fire or short circuit the battery;
- The voltage applied between the terminals or between any terminal and the grounding cannot exceed the rated value;
- Before using the product, please check the appearance of the product to ensure there is no damage;
- If the product is damaged or malfunctions, please do not use it and contact Additel;
- Never use the product in an explosive, steam or dust environment.

Attention:

To prevent damage the product or the device under tested, please obey this manual for use.

- Do not use the product in a high vibration environment;
- Use only the power adaptor provided by Additel for charging the battery;
- If the product is abnormal, please stop using it and contact with Additel.

1. Introduction

1.1 General Introduction

ADT282 Reference Thermometer Readout delivers the best possible accuracies and features on your hand! It makes it possible for high accuracy temperature measurement, continues logging, data analysis and curve display, and supports plug and play of intelligent temperature probe. ADT282 has a sensor library with numerous temperature sensors, it is an ideal substitute for standard primary mercury thermometer. With the 1 mK temperature resolution and 0.1mΩ/0.1uV electrical resolution, it is the best choice for handheld reference multi-function thermometers both in field and in the laboratory.

Contact us:
Additel Corporation
Tel: +1-714-998-6899
www.additel.com

1.2 Model and function

Table 1 Dual-Channel Reference Thermometer Readout

Item	ADT282
Dual-Channel Thermometer	•
Data log	•

1.3 Technical Specification

1.3.1 General Technical Specifications

Table 2 General technical Specifications

Item	Specification
Display	5.0 inch 480*800TFT LCD capacitive screen
Dimensions	16.97" x 4.13" x 2.04" (177 mm x 105 mm x 52 mm)
Weight	1.5 lbs. (0.65 Kg)
Button	1 power button
Power Supply	1. 6600mAh, 23.8Wh lithium battery, battery pack can be charged independently. 2. Specific power adaptor, maximum current 1.5A

Charging	By specific power adaptor, charging time 6 hours
Power consumption	Maximum power 2W
Environment	Specification guaranteed temperature range: (10~30)℃ Working Temperature: (-10~50)℃ Storage temperature: (-20~70)℃ Humidity: 0% ~ 95% RH, non-condensing Maximum altitude: 3000m
Warm-up Time	After 10 minutes of power on, specifications can be reached
Ports Protection Voltage	50Vmax
CE Certificate	TUV IEC61326, IEC61010
Rohs Compliance	Rohs II Directive 2011/65/EU, EN50581:2012
IP Protection Level	IP67, 1 meter drop test
Vibration	5g for low and high frequency
Impact	8g
Salt spray test	48 hours

Refresh rate	3 times/s
Communication	Isolate USB-TYPE C (slave), Bluetooth BLE
Input Channels	Top: CH1, CH2 analog channel, 6 pins smart lemo ports； MINI-TC ports Right: CHA, CHB digital channel, 5 pins smart lemo ports
Measuring Rates	▪ CH1, CH2 analog channels alternately and cyclically measure RTD measuring rate: 1.6S/single channel, 1.6S/dual channel TC measuring rate: 0.8S/single channel, 0.8S/dual channel ▪ CHA, CHB digital channel simultaneously measure
RTD measurement	▪ 6 pins smart lemo ports for RTD probe and SPRT, plug and play Use lemo adaptor for various SPRT and RTD ▪(0～400)Ω ▪ 4-wires measure, current reversal, excite current 1 mA ▪ range: (-200～850)℃, highest resolution：0.001℃
TC measurement	▪ (-10～75)mV ▪ range：(-270～1800)℃, highest resolution：0.001℃

	▪ CJC type：fixed, internal or external ▪ internal CJC

1.3.2 Technical Specifications of Signal Measurement

Table 3 Technical Specifications of signal measurement (Environment Temperature: 20±10℃, 1 year accuracy)

Signal types	Range	Resolution	Accuracy
RTD	(0~400)Ω	0.1mΩ	±0.5mΩ@(0~20Ω), ±25ppm RD@ (20Ω~400Ω)
TC	(-10~75)mV	0.1uV	±(50ppmRD+2uV)
Internal CJC	NA	NA	±0.15℃(-10℃~50℃ Guarantee specification)

Notes：

1. When the environmental temperature is(-10~+10)℃ and(30~50) ℃,the temperature coefficient is: Its temperature coefficient is

（1）Simulate RTD measurement: ±2ppmFS/℃。

（2）Simulate TC measurement: ±5ppmFS/℃。

2. RTD measurement excitation: 4 wires measurement, current reversal, Excitation current: 1mA.

1.3.3 RTD Measurement

Table 4 RTD measurement (Environment temperature: 20±10℃)

RTD Types	Temperature(℃)		1 Year Accuracy(℃)
PT10(385)	-200~850	-200~200	0.014
		200~600	0.024
		600~850	0.033
PT25(385)	-200~850	-200~200	0.012
		200~600	0.024
		600~850	0.033
PT50(385)	-200~850	-200~200	0.012
		200~600	0.024
		600~850	0.033
PT100(385) **PT100(391)** **PT100(3916)** **PT100(3926)**	-200~850	-200~200	0.012
		200~600	0.024
		600~850	0.033
Cu10(427)	-200~260	-200~260	0.013
Cu50(428)	-50~150	-50~150	0.010
Cu100(428)	-50~150	-50~150	0.010

Ni100(617)	-60~180	-60~0	0.005
Ni100(618)		0~180	0.007
Ni120 (672)	-80~260	-80~260	0.007

Notes:

1. Conforms to the ITS90 international temperature standard, determined by the maximum tolerance of the RTD measurement, excluding the accuracy of the probe;
2. After connecting the probe, the combined accuracy can be calculated directly after the RSS (root-sum-square) of the probe accuracy and RTD measurement accuracy;
3. Additel provides intelligent short secondary PT100 probes.

1.3.4 TC Measurement

Table 5 TC measurement (Environment temperature: 20±10℃)

TC Types	Temperature Range(℃)		0℃ CJC compensation 1 Year Accuracy(℃)	Internal CJC compensation 1 Year Accuracy(℃)
S	-50~1768	-50~0	0.51	0.53
		0~100	0.37	0.40
		100~1768	0.28	0.32

R	-50~1768	-50~0	0.54	0.56
		0~200	0.38	0.41
		200~1768	0.25	0.29
B	0~1820	200~300	1.01	1.02
		300~500	0.66	0.68
		500~800	0.41	0.44
		800~1820	0.28	0.32
K	-270~1372	-250~-200	0.48	0.50
		-200~-100	0.15	0.21
		-100~600	0.08	0.17
		600~1372	0.14	0.21
N	-270~1300	-250~-200	0.76	0.77
		-200~-100	0.22	0.27
		-100~1300	0.12	0.19
E	-270~1000	-250~-200	0.26	0.30

		-200~-100	0.10	0.18
		-100~700	0.06	0.16
		700~1000	0.08	0.17
J	-210~1200	-210~-100	0.13	0.20
		-100~700	0.06	0.16
		700~1200	0.10	0.18
T	-270~400	-250~-100	0.36	0.39
		-100~0	0.08	0.17
		0~400	0.05	0.16
C	0~2315	0~1000	0.16	0.22
		1000~1800	0.26	0.30
		1800~2315	0.42	0.45
D	0~2315	0~100	0.21	0.26
		100~1200	0.16	0.22
		1200~2000	0.27	0.31

		2000~2315	0.42	0.45
G	0~2315	50~100	0.60	0.62
		100~200	0.38	0.41
		200~400	0.24	0.28
		400~1500	0.16	0.22
		1500~2315	0.32	0.35
L	-200~900	-200~-100	0.07	0.17
		-100~400	0.06	0.16
		400~900	0.07	0.17
U	-200~600	-200~0	0.14	0.21
		0~600	0.05	0.16
LR	-200~800	-200~0	0.09	0.17
		0~800	0.06	0.16
A	0~2500	0~1200	0.20	0.25
		1200~2000	0.33	0.36

		2000~2500	0.48	0.50

Notes:

1. Conforms to the ITS90 international temperature standard, determined by the maximum tolerance of the TC mV measurement, excluding the accuracy of the probe;
2. After connecting the probe, the combined accuracy can be calculated directly after the RSS (root-sum-square) of the probe accuracy and RTD measurement accuracy;
3. Additel provides standard S-type TC probe with MINI-TC connector.

1.4 Basic Structure

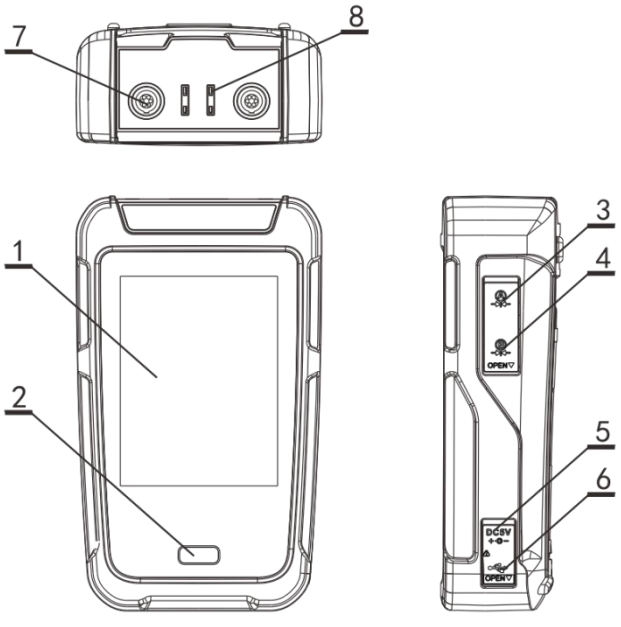

Figure 1 Basic Structure

Table 6 Basic structure list

No.	Part Name	Description
1	Display+ capacitive touch screen	Touch display and capacitive screen
2	Power button	Switch on/off.
3	Lemo style port A	Connect to external modules
4	Lemo style port B	Connect to external modules
5	Adapter port	Power supply.
6	USB slave port	USB connection.
7	RTD measurement port	For RTD measurement
8	Mini TC port	For TC measurement

1.5 Accessory

Table 7 Accessory

Accessory		
Standard	U type MINI-TC calibration cable	1 pc
	6 pins intelligent lemo adaptor (alligator clip at one side) for connecting users' RTD, 2 pcs	2 pcs
	USB cable TYPE-A to C	1 pc
	Power adaptor	1 pc
	Smart Li battery	1 pc
	Hanging strap	
	User manual- English	1 pc
	Certificate (electrical)- English	1 pc
Optional	Lemo port secondary SPRT	
	MINI-TC standard S type TC	
	TC plug and compensation cable	
	Spare battery	
	LOGII data log and management software	
	Carrying case	1 pc

1.6 Power Supply

Power is supplied by smart lithium battery

- Smart lithium battery can be charged independently by using the power adaptor
- The power adapter quickly adapts to various countries power plugs
- Please do not put the product in fire or short circuit the battery
- Use only the power adaptor provided by Additel for charging the battery
- Use only the battery designated by Additel for power supply.



Figure 2 Power adaptor and various countries power plugs

2. Display and functions

Upon powering on, the ADT282 will go directly to the Thermometer, users can

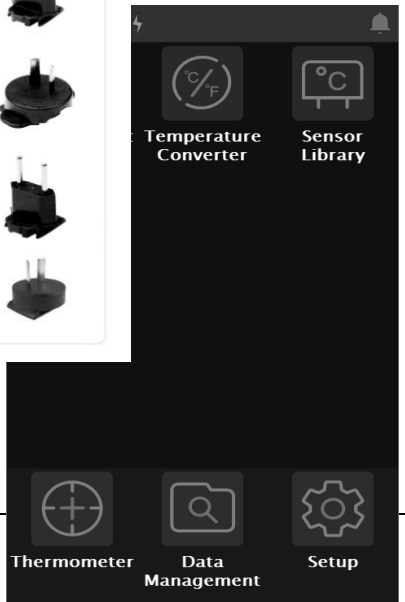

also return to main page in that interface (see Chapter 3).

2.1 Main Display

The main operation interface is divided into three parts from top to bottom. The top one is the status bar, the middle one is the APPs list, and the bottom is the main function navigation. (Figure 3)

1. Status bar includes time and date, battery status, lock screen status, Bluetooth and message control center. Note: Click the status bar to enter the control center for quickly view and control multi-function items, see Para 2.2.
2. APPs list shows all applications provided by the device, including data logging, temperature unit converter, temperature converter and sensor library.
3. Main function navigation provides access to three main functions at the bottom of the screen: Dual-Channel Thermometer, data management and System setup.

Figure 3 Main display

2.2 Control center

Click the status bar at the top of the display to enter the control center for quickly view and control multi-function items, as shown in Figure 4.

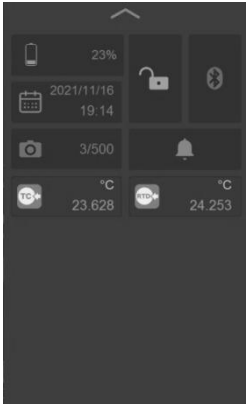

Figure 4 Control center

: Date and time of the system, click to modify;

: Battery level, shows battery remaining, plug the adaptor and change the charge mode;

: Message center, there will be a red dot when abnormal, click to enter the message center and show the abnormal message;

: Bluetooth, click to switch on/ off the Bluetooth;

: Snapshot, click to take a snapshot;

: Screen lock, click to lock the screen. Icon means the screen is locked, operate will be not allowed. Go to the control center to unlock.

The bottom part of the control center is the signal of different channels, orderly CH1, CH2 and different temperature module (only when the different temperature module is enabled).

3. Thermometer

The Thermometer is one of the main functions of the device (figure 5). It can

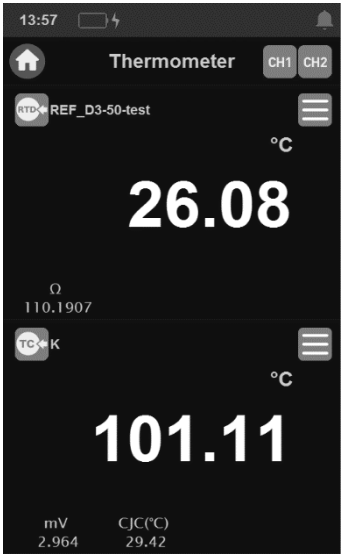

measure RTD and TC, up to four channels can be displayed at the same time, each channel measures a signal separately.

The icons CH1 and CH2 in the upper right corner indicate whether the current temperature measurement channel is open, click them to open or close the corresponding channel.

The measured signal value of the channel is displayed in the middle of the channel in real time, and the current signal type information is displayed on the upper left. Click the icon to switch the signal type. Click the menu icon in the upper right corner to set the current channel in the pop-up menu. Click the zeroing icon (when the channel supports it) to perform the zeroing operation on the current channel. If the signal type selected in the channel has multiple values for display (for example, when measuring TC, in addition to the temperature value, there are also the original mV signal value and the cold junction temperature value), then the channel will also display the main signal value Other signal values are shown below.

Figure 5 Thermometer

3.1 Temperature Measurement

There are TC temperature measurement and RTD temperature measurement available for temperature measurement.

3.1.1 TC Measurement

There are 2 mini TC sockets on the top of the unit, corresponding to two different channels. After connecting the TC to

the device, click the type switch menu of the corresponding temperature channel and select the TC to execute the TC measurement function.

Note:

To prevent damaging the device, do not try to force the mini TC plug into the wrong terminal, since one terminal is wider than the other.

If there is a temperature difference between the device and the mini TC plug, wait a minute or more after inserting the mini TC plug into the TC input/output to allow the connector temperature to stabilize.

3.1.2 TC Measurement Setup

Click “Setup” in the TC measurement menu to enter the TC setup. The following parameters can be set in this menu.

Table 8 TC Measurement Setup

Subject	Valid Value	Description
Sensor types	mV/TC sensors	Choose the TC sensors
Cold junction type	Auto/Fixed/External	Choose the mode of cold junction. Built-in cold junction of device is used for Internal mode.
External cold junction compensation range	-80~300℃	Apply to Fixed cold junction type.
Temperature unit	K/℉/℃	Choose temperature unit
Resolution	0/0.1/0.01/0.001	Number of displayed decimal places

3.1.3 RTD Measurement

There are 2 lemo style RTD measurement sockets on the top of the unit to connect the RTDs. After connecting the RTD to the device, click the type switch menu of the corresponding temperature channel and select the RTD to execute the RTD measurement function.

3.1.4 RTD Measurement Setup

Click “Setup” in the RTD measurement menu to enter the RTD setup. The following parameters can be set in this menu.

Table 9 RTD Measurement Setup

Subject	Valid Value	Description
Sensor Types	Ω/RTD sensor types	Choose the RTD sensors
Temperature unit	K / ℉/ ℃	Choose temperature unit
Resolution	0/0.1/0.01/0.001	Number of displayed decimal places

3.1.5 Filter

Dual-Channel Thermometer provides two filtering methods: first-order linear filtering and average filter to meet the

needs of different usage scenarios. Click the menu icon ☰ of measurement channel to select the filter menu item in the pop-up menu and the filter setup interface will be displayed. (Table 10)

Table 10 Filter Setup

Subject	Valid Value	Description
Enable	Enable/disable	Set filter enable
Method	First-order filter/Average filter	Select filter method
Coefficient	0.05 ~ 1	Only available for first-order filter
Samples	1~100	Only available for average filter
Extremum pair number	0~10	Only available for average filter

3.1.6 Zeroing

mV and resistance signals provide short-circuit zeroing operation to eliminate zero-point drift. The allowable zeroing range is 1% FS.

3.1.7 Statistics

Click the menu icon  in the measurement channel and select the statistics menu in the pop-up menu, the maximum value Max, minimum value Min and average value Avg of the data will be displayed on the bottom of the channel display. Click the reset icon  on the top of the channel to reset the statistics.

4. System Settings

In the main page of the device, click the system settings button  at the bottom right to enter the system settings interface. This page contains Bluetooth, personalization, service, power management, about product and channel lock.

4.1 Bluetooth

ADT282 has a Bluetooth communication function. Click the "Bluetooth" menu in the system setting interface to enter the Bluetooth communication setting interface. The Bluetooth communication setting interface provides the enable and disable of the Bluetooth communication function and the query function of the Bluetooth device name and physical address.

4.2 Power Management

4.2.1 Display Brightness

The LCD display brightness of the device can be modified by adjusting the brightness progress bar.

4.2.2 Battery Information

Display current battery connection status and information.

4.2.3 Auto Backlight Off

◆ If there is no button or communication command operations within the set time, the backlight brightness will be set to the lowest automatically;

◆ Backlight time can be set to: Never, 30 seconds, 1 minute, 5 minutes, 15 minutes, and 30 minutes.

◆ After the backlight is turned off, the first time button operation is to restore the backlight to normal brightness, then, the subsequent operations on buttons will take effect normally.

4.2.4 Auto Sleep

◆ If there is no button or communication command operation within the set time, the backlight will be turned off automatically and start the automatic sleep timing. After the timing is over, the unit will go into the sleep status;

◆ Auto sleep timer can be set to: Never, 1 minute, 5 minutes, 15 minutes and 30 minutes.

◆ When using power adapter for power supply, it will never sleep;

◆ Auto sleep is unavailable when performing auto step, slope, task, data logger and calibration;

◆ If the backlight time is set to never, then the auto sleep will be invalid.

4.2.5 Auto power off

◆ If there is no button and communication command operation within the set time, the backlight will be turned off, and the automatic shutdown timing will start after the start of auto sleep. After the timing is over, the unit will be power off automatically.

◆ Auto power off timer can be set to: Never, 5 minutes, 15 minutes, 30 minutes, 1 hour and 2 hours.

◆ When using power adapter for power supply, auto power off will be unavailable;

◆ If the backlight time is set to never, then the auto power off will be invalid.

4.3 Service

4.3.1 Calibration

Click the “calibration” menu in the system setting interface and input the calibration password “123456” in the pop-up box to enter the system calibration interface. All the measurement signals in the device can be calibrated in the system calibration interface. The calibration process is as follows:

1) Select the item to be calibrated in the items list.
2) Use a high-precision standard device, after fully warming up, follow the calibration guide in the interface and click the "Start" button to start the calibration.
3) According to the reference calibration point provided on the system, select the appropriate standard value and enter it.
4) Click the "Finish" button to write the calibration data into the system to complete the calibration.
5) Click the "Restore" button at the bottom left of the calibration interface to restore the field calibration data of the device. Click “Cancel zeroing” to cancel the zero data of the item.

4.3.2 Maintenance

A password is required to access to this function. The factory default password is 123456.

- ◆ Maintenance records: The maintenance information can be viewed and edited.
- ◆ Calibration records: The calibration records can be viewed here.
- ◆ Running information: The motherboard and battery information.
- ◆ Error log: The error records can be viewed here.

4.3.3 Factory Reset

A password is required to enable this function. The factory default password is 123456.

- ◆ Restore the factory will not delete the system calibration data.

4.4 Personalization

4.4.1 System Sound

The volume of the device can be modified by adjusting the volume progress bar. In addition, the prompt sound can also be configured. (Table 11)

Table 11 Sounds Settings

Subject	Valid value	Description
Touch sound	On/off	Set the touch-tone
Prompt sound	On/off	Set the beep
Over-range sound	On/off	Set the over-range beep
Snapshot sound	On/off	Set the snapshot beep
Stable sound	On/off	Set the stable beep

4.4.2 Language

The device provides multi-languages and the available languages can be selected through this menu.

After the language is selected, the device needs to be rebooted to take effect.

4.4.3 Date & Time

The date and time and date format can be set as need, see Table 12.

Table 12 Date and time settings

Subject	Valid value	Description
Date	2020-1-1 ~ 2048-12-31	Date setting
Time	00:00 ~ 23:59	Time setting
Date format	year-month-day / month-day-year / day-month-year	Date format setting
Delimiter	-, /, .	Delimiter setting

Time zone	UTC±00:00 ~ 12:00	Time zone setting
24 hours setting	Enable	Enable 24-hour display settings

4.5 About Product

Product information is read-only information, including basic information, version information and operating information:

- ◆ Basic information: including product model, serial number and system version information.
- ◆ Modules information: including Bluetooth and temperature board version.
- ◆ External modules information: including external A module information and external B module information.

5. Data Management

◆ Data management menu is classified and managed by different functional modules, and the data saved by each function is managed in the corresponding folder, which is convenient for users to review.

◆ The types of data files that can be saved include: Snapshot and Data Logger.

◆ Users can delete data files in batches.

6. Applications

6.1 Temperature unit Converter

Click the Applications at the top right of the main page, to enter the Temperature unit converter. It supports conversion between different temperature units.

6.2 Thermal calculator

The Dual-channel thermometer also provides a thermal calculator application for various industrial RTDs, TCs, and custom sensor types, which can easily convert between temperature and electrical signals for different sensors.

6.3 Sensor Library

In order to meet the needs of user custom sensor types, the device provides a sensor library function. Users can define new senor types according to their needs and set parameters in the sensors. The sensor library supports four types of custom sensors: ITS-90, CVD, Custom RTD and TC.

6.4 Data Logger

The Dual-channel thermometer provides the function of multi-channel long-term data logging and analysis. Click the "data logger" application icon in the main operation interface to enter. In order to better protect data security, data logging provide a power-off save function. When the shutdown occurs during the recording operation, the data logging will automatically save the data recorded before the shutdown. When the power is turned on again, enter the data logger

management interface, the device will prompt that there are unsaved records that need to be saved.

6.4.1 Logger Management

In the data logging management interface displayed after the application of "data logging", the completed log files displayed on the management interface are arranged in reverse order by date and time. At the bottom, there is the entry for delete and new record functions.

6.4.2 The start of data logging

Starting a new data record by clicking the new record icon at the bottom of the logging management interface. Before starting, please follow the steps below to configure:

1. Logging channel configuration

In the channel configuration interface, you can add or delete the logging channels, click on the added channel to enter the current channel detailed configuration interface, and further set the channel's measurement items, units, filter, and other information. For specific channel settings, please refer to the chapter " Thermometer ", it introduced the function operation of each signal measurement. The channel display color setting is also provided in the channel configuration interface. Appropriate color matching can make the channel data more clearly displayed in the recording operation. After the channel configuration is completed, click the start button at the bottom to continue the configuration of the running parameters

2. Sampling configuration

The sampling configuration of data logging is shown in Table 13. Click the start icon, edit the sampling settings, and click the start button at the bottom to start the data logging operation.

Table 13 Data logging parameter setting table

Subject	Valid Value	Description
Interval	0.5～100	To record the data interval time. Unit: second
Samples	2～1000000	Number of data
Time	Hour: minute: second	Data logging time

6.4.3 The operation of data logging

For more intuitive display and convenient operation, the record operation interface is divided into three functional areas: data logging curve display area, channel information display area (or data logging operation area) and record operation information display area.

1. Data record curve display area

♦ The abscissa is the time, which will be automatically adjusted according to the time of the logging operation.

♦ The ordinate is the data, which will be automatically adjusted according to the range of recorded data values.

When the curve shows only one channel, only the left vertical axis is displayed, and the axis scale is the engineering unit of the corresponding channel;

When the curve shows only two channels, the left and right vertical axes are displayed at the same time, and the axis scale is the engineering unit of the corresponding channel;

When the curve display has three or more channels, only the left vertical axis is displayed, and the axis scale is percentage. The real-time data of each channel is converted into percentage data according to the recorded minimum and maximum values for curve display.

♦ Click on the curve area to switch the channel information display area to the data logging operation display area;

2. Channel information display area

♦ Display the real-time data and statistical information of each logging channel (maximum, minimum, average, peak, and standard deviation)

♦ Click on the channel to control the display or hiding of the channel in the curve. If the channel is set to hide, the display color of the channel data text will change to white (using dark theme);

♦ The display area can only show up to two channels at the same time. When the number of channels exceeds two, you can switch to other channel display by sliding left and right:

3. Record operation information display area

Click the data record curve display area to open the record data operation display area. The recorded data operation display is divided into three modes: eye pattern mode (default), analysis mode, and following mode.

♦ Eye pattern mode：

The eye pattern mode is the normal data operation mode, and its data curve is drawn by the data of the whole period of operation.

♦ Analysis mode:

The analysis mode mainly analyzes the data of certain period time on the curve in the data logging and view the statistical information of the corresponding channel (view through the channel information display area). In the analysis mode, you can operate the operable buttons in the logging data display area (Move left/right, zoom in/out,

full record time, window time) to move the curve, and then operating the data segment selection axis operation buttons (X1, X2) to select the data area to analyze and click the return button to view data statistics of each channel.

♦ Following Mode：

The following mode is based on the time width of the current window, when the curve runs to the end of the curve frame, the start time in the data image will automatically change, so that the image curve can show the latest running status. You can adjust the width of the display time axis to display the curve in data logging operation area.

4. Record operation information display area

♦ Showing the record progress and record countdown；

♦ Click the stop button to stop the recording operation；

6.4.4 Save the data

When the data logging is completed or manually terminated, the calibrator will automatically display the record save interface, and the record name and operator information need to be entered in the save interface.

6.5 Differential Temperature

The thermometer provides a Temperature differential function. Users can calculate the temperature differences between 2 channels with this function.

ADT282 provides a differential temperature module composite application. The user can connect modules from CH1 and CH2, and composite a new differential temperature module through the differential temperature module function software processing in order to provide differential temperature accurate measurement under high static pressure. Click the differential temperature icon on the main screen of the device to enter the differential temperature interface. The detailed settings of the differential temperature modules are shown in table 14.

Table 14 The settings of the differential temperature module

Subject	Valid Value	Description
Enable	Enable /disable	Enable or disable the differential temperature module. When the differential temperature module is enabled, the differential temperature module channels will be displayed in the related functions channel list.
Resolution	4/5/6	The resolution of differential temperature
Range	Numbers	Differential module measuring range
Calculate type	CH1 - CH2 or CH2 - CH1	For the composite mode of differential temperature module, CH1 and CH2 represent two temperature measurement channels at the top of the device
Real time data	Real time differential temperature value	Read-only. When the temperature difference module is enabled and the two channels are measuring normally, the real-time temperature difference value will be displayed, Otherwise, the real-time differential temperature value is displayed as ---------
Align offset	The difference between two channels calculated when aligning the channels	Read only. When performing channel aligning, it will be changed and saved to the temperature difference between channels
CH1	Module real time values and units	Read only
CH2	Module real time values and units	Read only

Below items are also provided in the Differential Temperature function:

Channel align: when the differential temperature module is enabled and the CH1 and CH2 can measure the temperature, users can perform the channel align. By doing this, the device will calculate and save the temperature difference between two channels, and calculate the differential temperature;

Cancel align: cancel the offset value generated by the channel align operation, reset the offset to zero.

Additel Corporation
2900 Saturn Street #B
Brea, CA 92821 USA
Attn: Jenny Pu
Phone: 714-998-6899
Email: service@additel.com
website: www.additel.com