685/685Ex

Advanced Digital Pressure Gauge

ADT685/685Ex Advanced Digital Pressure Gauge

-------User Manual

[Version：2304V02]

Additel Corporation

STATEMENT

This user manual provides operating and safety instructions for the ADT685/685Ex Advanced Digital Pressure Gauge. To ensure correct operation and safety, please follow the instructions in this manual. Additel Corporation reserves the right to change the contents and other information contained in this manual without notice.

CONTENT

1. Introduction 3
1.1 General Introduction 3
1.2 Pressure Ranges and Accuracy 4
1.3 Technical Specifications 9
1.4 Features 10
1.5 Basic Structure 11
2. Operation 18
2.1 Main Display 18
2.2 Main Operation Interface 19
2.3 Buttons 22
2.4 Pressure Measurement 22
2.4.1 Pressure Percentage Indication 22
2.4.2 Pressure Zeroing 23
2.4.3 Pressure Unit Switching 24
2.4.4 Pressure Type Switching 24
2.4.5 Pressure Tare 24
2.4.6 Alarm 24
2.5 Pressure Peak Recording 24
2.6 Pressure Leak Test 26
2.7 Data Logging 29

2.8 Backlight ON/OFF 31
2.9 Screen Lock and Unlock 31
2.10 Date and Time 32
2.11 Password Display and Editing 34
2.12 Number Editing 35
2.13 Cycle Selection Keyboard Display and Editing 36
3. System Settings 37
3.1 Communications 38
3.1.1 Bluetooth 38
3.1.2 RS232/RS485 39
3.1.3 4-20mA 40
3.1.4 SWITCH Settings 41
3.2 Auto Power Off Settings 42
3.3 Filter Settings 42
3.4 Pressure Reading Display Rate 43
3.5 Calibration 44
3.5.1 Calibration Interface 44
3.5.2 Pressure Calibration 45
3.5.3 Barometric Calibration 47
3.5.4 (4~20) mA Calibration (only available when using (4~20) mA module) 48
3.6 OP List Settings 49
3.6.1 Version Information 49

3.6.2 Resolution Settings 49
3.6.3 Auto-Backlight Time Settings 49
3.6.4 Barometric Pressure and Temperature Display 49
3.6.5 Overpressure Record Information 49
3.6.6 Touch Sound Settings 50
3.6.7 Data Record Storage formatting Operation 50
3.6.8 Restore to Factory Settings 50
3.7 Malunction Information 50
3.8 Operation Error Codes 52
4. Copyright 53
Appendix A：RS232 module DB9 Pins Description 54
Appendix B：RS485 module DB9 Pins Description 55
Appendix C：SWITCH Module Pins Description 57
Appendix D：2 Wire (4~20) mA Module Pins Description 58
Appendix E: Special Notice for ADT685Ex Cable 59
Appendix F：ADT685Ex EX-Proof Description 60

Safety Instructions

Warning: The situation that poses a threat to user safety.

Attention: The condition that may cause damage to the gauges or affect the calibration result.

Warning:

To prevent the user from injury, please follow this user manual for use.

To prevent possible fire, electric shock or personal injury, please do as follows:

1. General:

The pressure medium should be confirmed before use. Please adhere to the following instructions:

- Please read the user manual before using the product;
- Before using the product, please check the appearance of the product to ensure there is no damage;
- Please refer to the operation steps in the manual when using the product;
- Please be sure to store, transport and use this product in the correct direction;
- If the product is damaged or malfunctions, please do not use it and contact Additel;
- Never use the non-Ex version in an explosive, steam or dust environment.

2. Electrical:

- Before using the product, please make sure that the power supply is connected correctly, and the installation is done properly.

Attention：

To prevent injury, please obey the instruction manual for use

To prevent possible damage, please do as follows:

- Do not use the instrument in a high vibration environment;
- If the gauge is abnormal, please stop using it and contact with Additel.

1. Introduction

1.1 General Introduction

ADT685 /ADT685EX Advanced Digital Pressure Gauge is the latest generation digital pressure gauges introduced by Additel Corporation. It is mainly used to calibrate precision pressure gauges, general pressure gauges, sphygmomanometers or other pressure instruments and it can also be widely used for precision pressure measurement.

The power consumption of ADT685/ADT685EX is very low, which is suitable for long-term continuous work (Up to 20,000 hours under ultra-low power consumption mode). The ADT685/ADT685EX also has excellent electromagnetic compatibility characteristics, it has obtained the CE certification of the most authoritative organization and can be used in various complex electromagnetic environments.

Contact us:
Additel Corporation
Tel: +1-714-998-6899
www.additel.com

1.2 Pressure Ranges and Accuracy

Table 1 Gauge Pressure [1]（Sealed gauge pressure for above 1,000 psi）

P/N	Pressure Range		Media[2]	Accuracy		Burst Pressure
	(psi)	(bar)		%FS	%RD	
V15	-14.5	-1.0	G	0.02 (0.05)	N/A	3X
GP2	2	0.16	G,L	0.05	N/A	3X
GP5	5	0.35	G,L	0.05	0.1	3X
GP10	10	0.7	G,L[3]	0.02 (0.05)	0.1	3X
GP15	15	1.0	G,L[3]	0.02 (0.05)	0.1	3X
GP30	30	2.0	G,L[3]	0.02 (0.05)	0.1	3X
GP50	50	3.5	G,L	0.02 (0.05)	0.1	3X
GP100	100	7.0	G,L	0.02 (0.05)	0.1	3X
GP150	150	10	G,L	0.02 (0.05)	0.1	3X
GP300	300	20	G,L	0.02 (0.05)	0.1	3X
GP500	500	35	G,L	0.02 (0.05)	0.1	3X
GP600	600	40	G,L	0.02 (0.05)	0.1	3X
GP1K	1,000	70	G,L	0.02 (0.05)	0.1	3X
GP1.5K	1,500	100	G,L	0.02 (0.05)	0.1	3X

GP2K	2,000	140	G,L	0.02 (0.05)	0.1	3X
GP3K	3,000	200	G,L	0.02 (0.05)	0.1	3X
GP5K	5,000	350	G,L	0.02 (0.05)	0.1	3X
GP10K	10,000	700	G,L	0.02 (0.05)	0.1	3X
GP15K	15,000	1,000	G,L	0.05 (0.1)	0.1	1.5X
GP20K	20,000	1,400	G,L	0.05 (0.1)	N/A	1.5X
GP25K	25,000	1,600	G,L	0.05 (0.1)	N/A	1.5X
GP30K	30,000	2,000	G,L	0.05 (0.1)	N/A	1.5X
GP36K	36,000	2,500	G,L	0.05 (0.1)	N/A	1.5X
GP40K	40,000	2,800	G,L	0.05 (0.1)	N/A	1.35X
GP50K	50,000	3,500	G,L	0.1 (0.2)	N/A	1.2X
GP60K	60,000	4,200	G,L	0.1 (0.2)	N/A	11X

[1] Sealed gauge pressure for above 1,000 psi.

[2] G=Gas, L=Liquid.

[3] 0.02% FS for gas media only.

Table 2 Differential Pressure

P/N	Pressure Range		Media	Accuracy (%FS) [1]	Burst Pressure	Static Pressure Range
	(inH2O)	(mbar)				
DP1	±1	±2.5	G	0.05[2]	100X	±10 psi
DP2	±2	±5.0	G	0.05[2]	100X	±10 psi
DP5	±5	±10	G	0.05[2]	50X	±10 psi
DP10	±10	±25	G	0.05[2]	20X	±10 psi
DP20	±20	±50	G	0.05	20X	±10 psi
DP30	±30	±75	G	0.05	20X	±10 psi
DP50	±50	±125	G	0.05	3X	±10 psi
DP100	±100	±250	G	0.02	3X	±15 psi
DP150	±150	±350	G	0.02	3X	50 psi
DP300	±300	±700	G	0.02	3X	50 psi

[1] FS specification applies to the span of the range. Accuracy includes one year stability.

[2] 0.05%FS accuracy (incl 6 months stability). One year accuracy is 0.05%FS calibration accuracy combined with 0.05%FS one year stability.

Table 3 Compound Pressure

P/N	Pressure Range		Media[1]	Accuracy		Burst Pressure
	(psi)	(bar)		%FS[2]	%RD	
CP2	±2	±0.16	G	0.05	N/A	3X
CP5	±5	±0.35	G	0.02 (0.05)	0.1	3X
CP10	±10	±0.7	G	0.02 (0.05)	0.1	3X
CP15	-14.5 to 15	±1	G	0.02 (0.05)	0.1	3X
CP30	-14.5 to 30	-1 to 2	G	0.02 (0.05)	0.1	3X
CP100	-14.5 to 100	-1 to 7	G,L	0.02 (0.05)	0.1	3X
CP300	-14.5 to 300	-1 to 20	G,L	0.02 (0.05)	0.1	3X
CP500	-14.5 to 500	-1 to 35	G,L	0.02 (0.05)	0.1	3X
CP600	-14.5 to 600	-1 to 40	G,L	0.02 (0.05)	0.1	3X
CP1K	-14.5 to 1000	-1 to 70	G,L	0.02 (0.05)	0.1	3X

[1] G=Gas, L=Liquid.

[2] FS specification applies to the span of the range.

Table 4 Absolute Pressure

P/N	Pressure Range		Media [1]	Accuracy (%FS)	Burst Pressure
	(psi)	(bar)			
AP5	5	0.35	G,L	0.1	3X
AP10	10	0.7	G,L	0.1	3X
AP15	15	1.0	G,L	0.1	3X
AP30	30	2.0	G,L	0.1	3X
AP50	50	3.5	G,L	0.1	3X
AP100	100	7.0	G,L	0.05(0.1)	3X
AP300	300	20	G,L	0.05(0.1)	3X
AP500	500	35	G,L	0.05(0.1)	3X
AP1K	1000	70	G,L	0.05(0.1)	3X
AP3K	3000	200	G,L	0.05(0.1)	3X
AP5K	5000	350	G,L	0.05(0.1)	3X

[1] G=Gas, L=Liquid.

*Note

- Temperature Compensation:(-10～50)℃, 1 year accuracy;
- Abs pressure, 0.05% accuracy, the time to guarantee this accuracy is 180days;
- The medium requires non-corrosive.

1.3 Technical Specifications

Table 5 Technical Specifications

Model	ADT685 Digital Pressure Gauge	ADT685Ex Intrinsically Safe Digital Pressure Gauge
Intrinsic Safety & European Compliance	CE	CE marked ATEX certified intrinsically safe II 1G EX ia IIC T4 Ga
Protection Level	IP67	
Case Material	304 SS	
Wetted Parts Material	316 SS[1]	
Dimensions	4.65" (118mm) width X 1.77" (42mm) depth X 7.01" (178mm) height	
Weight	1.50 lbs. (0.68 kg)	
Display	Touch screen (3.4" FSTN segment capacitive) - 5 1/2 full digits	
Button	4 Function buttons, 1 Power ON/OFF button	
Data Logging (Included with -DL models)	Data storage: 10,000,000 records (Time+Pressure)	
Communication	USB Type-C and Bluetooth included, RS-232 or RS-485[2] (optional)	

Power[3]	External power: 110/220 V adapter (5 VDC) (optional, excl ADT685Ex)	Battery: Three AA alkaline batteries (included) Battery life: 1500 hours typical Approved Batteries for ADT685Ex including: Energizer E91; Maxwell LR6; Panasonic Powerline LR6A; Rayovac 815.
Environmental	Compensated Temperature: 14°F to 122°F (-10°C to 50°C) Operating Temperature: 14°F to 122°F (-10°C to 50°C) Storage Temperature: -4°F to 158°F (-20°C to 70°C) Humidity: 0 - 95%, non-condensing	
Barometric Accuracy (Built-in barometer)	Range: (60~110) kPa.a, accuracy: 50Pa	

[1] Wetted parts material types may vary by pressure range. Please refer to manual or contact Additel for more information.

[2] 4-20 mA output and RS-485 not available in ADT685Ex models.

[3] External power required when using the 4~20mA.

1.4 Features

Ultra-low power consumption design, long-term operation Wide pressure ranges, up to 60,000 psi (4,200 bar) Capacitive touch screen, interactive operation is convenient and easy to use Supports multiple type communication modules to meet different needs, optional communication module including:

RS-232 or RS-485

1.5 Basic Structure

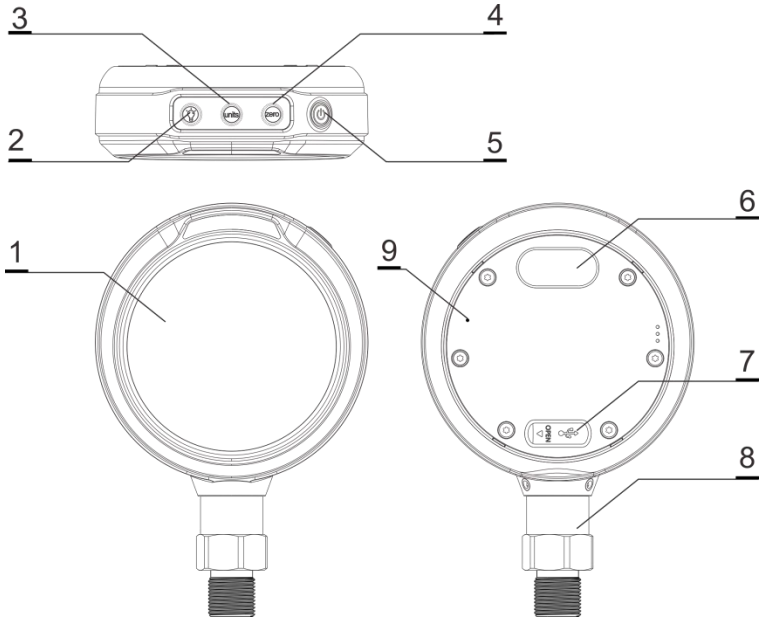

Figure 1 Basic Structure

Table 6 Basic Structure

No.	Part Name	Function
1	LCD Display	
2	Back Light Button	Turn on/off the back light
3	Units Button	Switch the pressure engineering units
4	Zeroing/Clear Button	Readings zeroing or to clear the number in number editing interface
5	Power On/Off / Reset Button	Long press to power on/off the gauge, short pressure to return to previous interface
6	Switchable Communication Module	Optional RS232, RS485, 2-wire (4~20) mA module and SWITCH
7	USB-Type C Port	Communication and power supply
8	Pressure module	
9	Barometric pressure inlet port	Visible after removing the back cover (with ATM logo), it is used for barometer sensor calibration

1.6 Power supply

For ADT685, power can be supplied by battery or USB TYPE-C 5V adaptor.

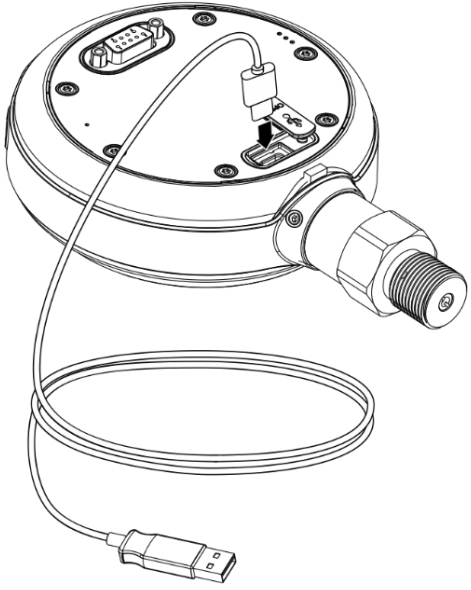

Figure 2-1 Power supply by adaptor

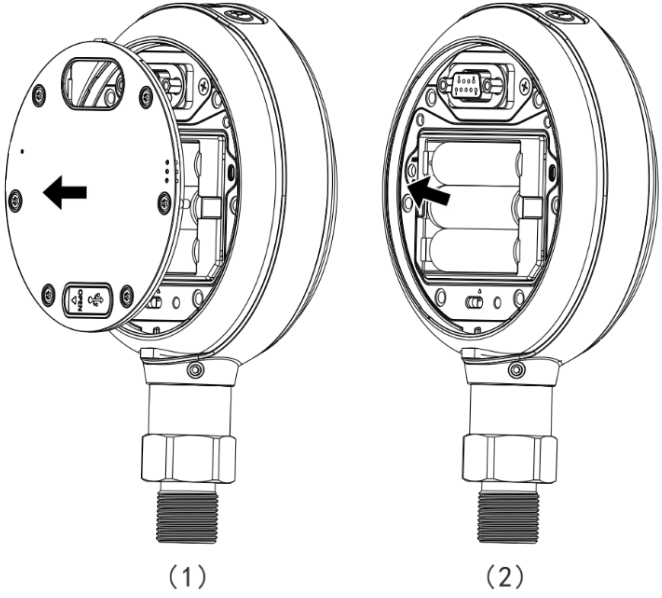

Figure 2-2 Power supply by battery

For ADT685Ex, power is supplied by battery.

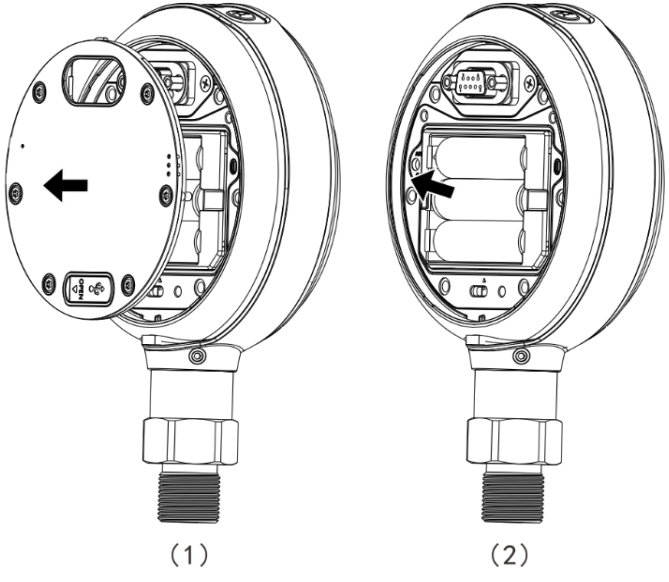

Figure 3 Battery installation

Warning:

- If using battery, please replace battery when the device is automatically powered off due to low power.
- When replacing the battery, please note the direction of battery electrodes.
- Never replace the battery in hazardous area.
- Use only the approved battery models.
- For ADT685 (non-Ex), it should use three AA(LR6) batteries.
- For ADT685Ex, these battery models are approved to use: Energizer E91, Panasonic Powerline LR6A, Rayovac 815 and Maxwell LR6.

1.7 Battery life and configuration

Table 7 1.7 Battery life and configuration

System mode	Pressure display rate	ADT685 battery life	ADT685Ex battery life
Normal	10 readings/ 1 s	520h	520h
Normal (default)	3 readings/ 1 s	560h	560h
Low power consumption	3 readings/ 1 s (L)	4500h	4200h
Low power consumption	2 readings/ 1 s (L)	5800h	5300h
Low power consumption	1 reading/ 1 s (L)	9000h	7700h
Low power consumption	1 reading/ 2 s (L)	10900h	8900h
Low power consumption	1 reading/ 3 s (L)	13000h	10000h
Low power consumption	1 reading/ 4 s (L)	13800h	10700h
Low power consumption	1 reading/ 5 s (L)	14300h	11400h
Low power consumption	1 reading/ 6 s (L)	16100h	11900h
Low power consumption	1 reading/ 7 s (L)	16600h	12500h
Low power consumption	1 reading/ 8 s (L)	17100h	12600h

Low power consumption	1 reading/ 9 s (L)	17800h	13500h
Low power consumption	1 reading/ 10 s (L)	18200h	13800h

Note:

The “L” in the table indicates the pressure module is in low power consumption mode. Go to Rate menu, users can set the pressure display rate in the main display area, and enable/disable the low power consumption mode in sub display area. See paragraph 3.4 for more detail.

2.Operation

2.1 Main Display

Main display as shown in Figure 2:

Menu bar: To access to the main functions of the gauge

Status bar: Including USB status, Bluetooth, battery, DIFF icons. The Bluetooth icon can be clicked to turn on or off Bluetooth, when the battery icon is blank and flashing, Bluetooth will be turned off automatically. When the battery power is too low, it will prompt the low battery to automatically turn off and will start to countdown to turn off the gauge automatically. When the 4-20 mA module is enabled, the battery icon is not displayed due to the fact that External power is required when using the 4-20mA option. Units and prompt information display area: Display engineering units or function items and other information.

Identifier area : Including DIFF,AM,PM ， filtering status icons

Percentage Pressure Indicating Area：Displays the pressure percentage on the around of the main display

Main display area: Display pressure values and other information.

Sub display area: Display a multi-digit value, or it can be divided into two left and right values for display, and supports the display of Min, Max, Atm, sec, ℃, ℉ and% icons at the same time.

Zero/Ok Button: Pressure zeroing, value reset and confirmation operations.

icon means the touch screen is in sleep state, use the 4 physical buttons on the top can wake up the gauge. After waking up, if there is no touch operation in the main interface for 60 seconds, the touch screen will automatically enter the sleep state, and this icon will be displayed on the main interface at the same time (Except the secondary menu interface, once you enter the secondary menu interface, the pressure gauge touch screen will always be awake).

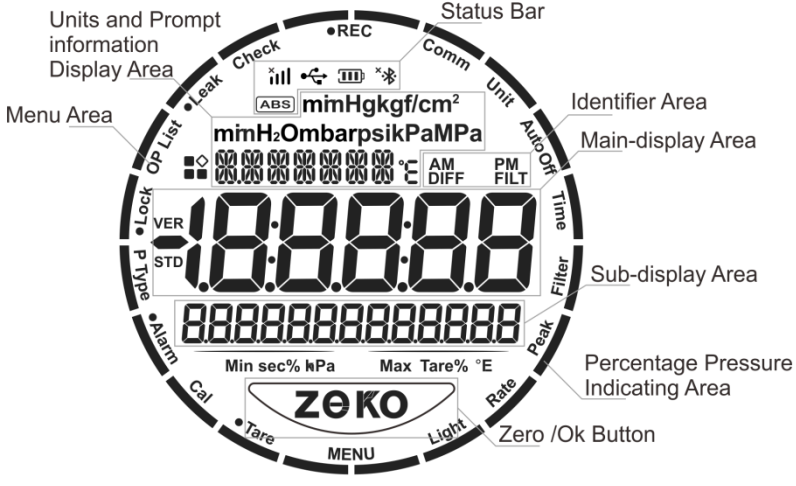

Figure 2 Main Display

2.2 Main Operation Interface

After the pressure gauge is turned on, it first displays the interface of the original range of the pressure module. 3 seconds later, it will enter the main interface immediately. The main interface display is divided into: menu bar, status bar, pressure unit display area, identifier area, main value display area, and secondary value display area and Zero/OK button,

as shown in Figure 3.



Figure 3 Main Operation Interface

1. Menu Bar：The main interface displays the following menus, click the menu to enter or enable different functions:

(1) MENU：Click to enter the system setting function interface, in other interfaces, the MENU button is used to return to the previous interface.

(2) Tare：Enable or disable the tare function, after this function is enabled, the set Tare value will be displayed on the right side of the secondary value display area, press it to enter the editing interface to edit this value.

(3) Alarm：Enable or disable the alarm function. After this function is enabled, the left and right sides of the

secondary value display area will display the lower limit and upper limit of the alarm respectively. Press it to edit separately.

(4) Leak: Enter the pressure leak test interface, see chapter 2.6.

(5) Lock: Lock/Unlock the touch screen.

(6) REC: Enter the pressure record interface, see chapter 2.7.

(7) Unit：Pressure unit switching.

(8) Time: Enter the date and time editing interface.

(9) Peak: Enter the pressure peak record interface, see chapter 2.5.

(10) Light: Turn on or off the backlight, long press to enter the backlight time setting.

2. Status Bar: Including USB status, Bluetooth, battery, DIFF, absolute pressure
   The Bluetooth icon can be clicked to turn on or off Bluetooth function.
3. Units and prompt information display area: Display engineering units, click this area to switch the pressure unit.
4. Main display area: Display pressure values, long press to enter the pressure resolution editing interface.
5. Sub display area: Display atmospheric pressure/temperature, tare value or Alarm upper and lower limits. When all three functions are enabled, clicking the main display area will switch to display one of the messages in a loop. If all the three functions are not enabled, the sub display area is empty.
6. Zero button: Zeroing the gauge under gauge pressure mode. In the absolute pressure mode, the Zero button will be hidden.
7. Identifier area: Including DIFF,AM,PM ， filtering status icons

2.3 Buttons

Power ON/OFF Button: Long press 3 seconds to power on/off the gauge. In the data input state, it could delete the inputted data. In the menu state, it has the function of returning to the previous menu.

Backlight Button: Short press this button to turn on/off the display backlight, long press this button to set the backlight duration time, there are five options: 10 seconds, 20 seconds, 30 seconds, 60 seconds, and ON (the backlight is always on).

units Units Button: Short press this button to switch the pressure engineering unit; long press this key to switch to the temperature display and atmospheric pressure display function.

zero Zero Button: Short press this button to zeroing the gauge.

Note: After the pressure gauge enters the lock screen state (a dot is displayed in front of the Lock icon in menu bar), only the Power on/off button can be operated, and a lock screen reminder will be triggered when the other three buttons are operated.

2.4 Pressure Measurement

When the gauge is in the main interface, it will display the current pressure unit and real-time pressure value and display the pressure percentage around the parameter of the main display.

2.4.1 Pressure Percentage Indication

The pressure gauge displays the pressure percentage on the around of the main display after entering the main interface. As shown in Figure 4.



Figure 4 Pressure percentage indication

2.4.2 Pressure Zeroing

When the gauge is in gauge pressure mode, press Zero button to execute the pressure zeroing. If the zeroing operation fails, the pressure gauge will emit an error, and the Zero button will flash quickly to remind you. When in absolute pressure mode, the Zero button is not displayed on the main interface, and the zeroing operation cannot be performed.

2.4.3 Pressure Unit Switching

Click the unit and prompt information display area to switch the pressure units, touch the left half of the pressure unit area to switch to the previous pressure unit, and touch the right half to switch to the next pressure unit.

2.4.4 Pressure Type Switching

Click the MENU could enter the secondary menu bar, then, click P Type in the secondary menu bar to switch the gauge/absolute pressure mode. When switching to the absolute pressure mode, the status bar will display the ABS icon. If the pressure gauge does not support gauge/absolute pressure mode switching, the P Type menu will be hidden.

2.4.5 Pressure Tare

Click the Tare icon in the menu bar to enable or disable the tare function. After this function is enabled, a black dot will appear in front of the Tare icon, and the set tare value will be displayed on the right side of the sub display area. Press it to edit this value.

2.4.6 Alarm

Click the Alarm icon in the menu bar to enable or disable the alarm function. After this function is enabled, a small black dot will appear in front of the Alarm icon, and the left and right sides of the sub display area will display the lower and upper limits of the alarm. Press them to edit separately. When the pressure value exceeds the alarm limit, an alarm tone will sound, the pressure value in the main value area of the screen and the percentage pressure on the outside of the display will flash.

2.5 Pressure Peak Recording

Click the Peak icon in the menu bar to enter the peak recording interface, as shown in Figure 5. Click Zero to reset the peak values. Click the Lock icon during the recording process to lock the screen and click Lock again to unlock.

Click the Peak or MENU icons to return to the main operation interface.



Figure 5 Pressure peaks recording

Table 7 Pressure peaks setting parameter table

Items	Introductions
Max	Maximum Value
Min	Minimum Value
Zero	Reset data

2.6 Pressure Leak Test

2.6.1 Click the Leak icon in the menu bar to enter the pressure leak test setting interface, as shown in Figure 6, the main value area displays the test time 00059, press the up and down number to edit this value. Click the unit position to switch the pressure unit. The sub-display area displays the real-time pressure value 001329, click OK button to start the pressure leak test.



Figure 6 Pressure leak test setting interface

2.6.2 In the pressure leak test operation interface, a black dot appears in front of the Leak menu, the main display area displays the countdown, and the sub display area displays the real-time pressure value, as shown in Figure 7.



Figure7 Pressure leak test operation interface

2.6.3 When the pressure leak test operation is finished, as shown in Figure 8, the DIFF icon appears in the identifier area and the differential pressure value is displayed in the main display area. Click the sub display area to switch between the start pressure value P1 and the end pressure value P2.



Figure 8 Pressure leak test finish interface

2.7 Data Logging

2.7.1 Click REC on the menu bar to enter the data logging setting interface, as shown in Figure 9, the main display area displays the real-time pressure value 050.004, the left side of the sub display area displays the logging interval 0.1 sec, click it to edit the time interval, and the right side displays the used storage space in percentage, click it to delete the stored data. Click OK to start logging pressure data.



Figure 9 Data logging setting interface

2.7.2 The pressure record operation interface, as shown in Figure 10. A small black dot appears in front of the REC menu, the main display area displays the real-time pressure value, the left side of the sub display area displays the number of recorded data 999, and the right side displays the percentage of storage space that has been used 60.5.



Figure 10 pressure record operation interface

2.8 Backlight ON/OFF

Short press Light icon in the menu bar, you can turn on and off the backlight function. Long press to enter the backlight setting interface, as shown in Figure 11, the main display area displays the automatic backlight turn off time, click it to edit the automatic backlight off time.

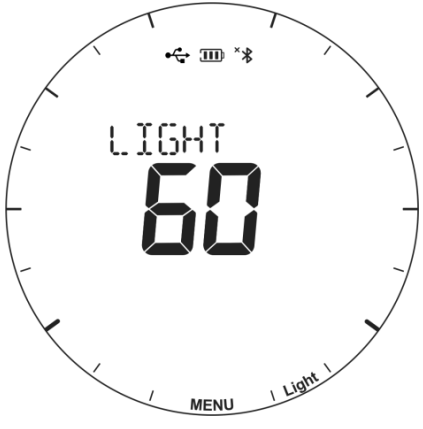

Figure 11 Backlight setting interface

2.9 Screen Lock and Unlock

Short press the “Lock” on the menu bar to lock the screen. Long press the “Lock” again to unlock. When entering the lock screen state, a dot is displayed in front of the Lock icon. At this time, the lock menu, light menu, power button and

backlight button can be operated. Click other places on the screen or three other physical buttons, the Lock menu bar will flash to remind the pressure gauge has entered the lock screen state.

Note: If the password protection is turned on, you will be prompted to enter the password when the unlock operation is performed, and only the correct password will unlock the display.

2.10 Date and Time

Click Time icon in the menu bar to enter the date and time display interface, as shown in Figure 12 and Figure 13.

Press the title bar can switch to the time display interface, date display interface, time format interface, date format interface,12-hour AM PM format interface(Current time under12-hour format show on this interface)



Figure12 Time display interface



Figure13 Date display interface

12-hour AM PM display interface, as shown in Figure 14.



Figure14 12-hour AM PM display interface

Press the main display area of the time to enter the time editing interface .If the current time under 24-hour format ,please press the right side of sub display to edit second .

Press the year display position in date display interface to enter the year editing interface.

Press the month&day display position to enter month&day editing interface.

Press the main display area of time format interface to edit the time format, you can choose12-hour-or 24hour format.

Press the main display area of date format interface can switch the date format to yyyy-mm-dd, mm-dd-yyyy,dd-mm-yyyy.

Press the main display 12-hour format AM PM interface can switch to 12-hour format AM PM settings.

2.11 Password Display and Editing

When entering the pressure gauge calibration, restoring the factory settings, and clearing the data record function, the password keyboard will pop up. The password keyboard can edit each digit by press up and down arrows, click the OK button to confirm the password, and click the MENU icon or power button to cancel and return. As shown in Figure 15.

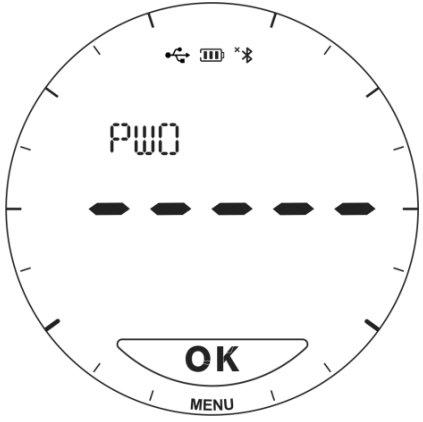

Figure15 Password display and edit interface

2.12 Number Editing

The pressure gauge provides a number editing interface, as shown in Figure 16. Adjust the value by clicking the symbol area on the left side of the screen to switch the positive or negative sign. Click the OK button to confirm, click Menu icon or short press the power button to cancel and return.



Figure16 Numbers editing interface

2.13 Cycle Selection Keyboard Display and Editing

The gauge provides a cycle selection keyboard to set parameters, as shown in Figure 17. The main display area will flash to indicate that this area can be edited, and the main display area can be switched by clicking the upper and lower edges of the main display area to cycle through the selections. Click the MENU icon or short press the power button to cancel the setting and return.



Figure17 Cycle selection keyboard editing interface

3. System Settings

On the main interface, press the MENU icon on the menu bar to enter the system settings.

The system settings include the following:

MENU: Press it to return to the main interface, in other interfaces, it is used to return to the previous interface.

Cal: Perform pressure module, atmospheric pressure sensor and current measurement (only supported when the 4-20 mA module is configured) calibration.

OP List: Press to enter the system information menu. Press the title bar (example: “Version”) to see the rest of the operating list menus, it include version display, resolution setting, backlight time setting, whether the main interface displays atmospheric pressure and temperature or not, overpressure record display, touch sound on/off settings ,data record storage formatting operation, restore to factory settings.

Check: Display the error code of the equipment failure.

Comm: Press to enter the communication setting interface.

Auto Off: Press to enter the automatic power off setting interface.

Filter: Press to enter the filtering setting interface.

P Type: Click P Type in the menu bar to switch the gauge/absolute pressure mode. When switching to the absolute pressure mode, the status bar will display the ABS icon. If the pressure gauge does not support gauge/absolute pressure mode switching, the P Type menu will be hidden.

Rate: Press to enter the pressure rate mode setting interface.

3.1 Communications

Press the Comm icon to enter the communication setting interface, press the title bar to switch between different communication setting interfaces.

3.1.1 Bluetooth

The gauge can communicate with the mobile App Additel Link via Bluetooth.

Table 8 Wireless communication settings

Items	Effective Value	Explanation
Bluetooth	ON/OFF	The main display area and buletooth icon in status bar displays the bluetooth on/off status, click to the main display area or buletooth icon set the bluetooth switch on/off status
MAC Address	Read Only	The sub display area displays the Bluetooth MAC address (displayed from the second digit of the MAC address)

3.1.2 RS232/RS485

When the RS232/RS485 module is enabled, the RS232/RS485 module setting interface will appear in the communication settings, as shown in Figure 18. The main display area displays the address 001, click to edit it. The left side of the sub display area displays the baud rate 9600 , click to enter to select the baud rate. The right side of the sub display area displays the number of data digits and stop bits 8-1 , click to enter editing.



Figure18 RS232/RS485 setting interface

3.1.3 4-20mA

1. When the 4-20mA module is enabled, the range setting interface is shown in Figure 19. The sub display area provides the setting of the upper and lower limits of the range, and the unit is same as the main display unit of the gauge.



Figure19. 4-20mA ranges setting interface

2. When the 4-20mA module is enabled, the loop current test interface is shown in Figure 20. Click the main display area and set a value that within the current output range to enter the loop current test state.
3. External power is required when using 4~20mA option.

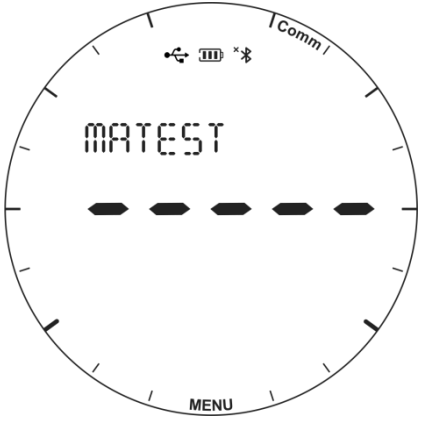

Figure 20　4-20mA loop current test interface

3.1.4 SWITCH Settings

When the SWITCH module is enabled, the setting interface is shown in Figure 21. SWITCH is associated with the pressure alarm in section 2.4.6, the main display area shows ALARM, and the output state is ON or OFF, click the main display area to switch.



Figure21 Switch module setting interface

3.2 Auto Power Off Settings

Press the Auto Off icon on menu bar to enter the auto power off setting, click the title bar to turn on or off the auto power off function, in the open state, click the main value display area to edit the auto power off time 000059.

3.3 Filter Settings

Press the Filter icon in the menu bar to enter the filter setting interface and click the title bar to cycle through the filter modes: off, first-order filtering, and average filtering.

1. First-order filtering, the main display area displays the filter coefficient, click to edit.
2. Average filtering, the main display area displays the number of filtered samples, click to edit, and the sub display

area displays the number of extreme value pairs will be removed, click to edit.

Table 9 Filter Settings

Item	Effective Value	Explanation
Filtering	ON/OFF	Filter ON or OFF
Filter Modes	First-order filtering / Average filtering	Choose the filter modes
Coefficient	0.05～1	First-order filtering mode is applicable
Number of filtered samples	1～10	Number of samples for average filtering
Extreme value pairs will be removed	0～4 (The Extreme value pairs number should not exceed (Samples number-1)/2)	Extreme value pairs will be removed in average filtering

3.4 Pressure Reading Display Rate

Click Rate in the menu bar to enter the pressure readings display rate setting, the main display area displays the pressure readings display rate, 3-1 means that the gauge displays 3 readings per second. Click to edit.

The pressure gauge provides the following reading display rates:

10─1(10 readings/1 sec), 3─1(3 readings/1 sec), 2─1 L(2 readings/1 sec), 1─1 L(1 readings/1 sec)

1─2 L(1 reading/2 sec), 1─3 L(1 reading/3sec), 1─4 L(1 reading/4 sec), 1─5 L(1 reading/5 secs,

1─6 L(1 reading/6 sec), 1─7 L(1 reading/7 sec), 1─8 L(1 reading/8 sec), 1─9 L(1 reading/9 sec),

1─10 L(1 reading/10 sec)

With a L indicates that the gauge is in low power consumption working mode, and without L indicates that the gauge is in normal working mode.

The sub display area sets the system low power consumption mode. When the optional module is not a 4-20mA transmitter module, the low power consumption mode open or close settings will be displayed in this area. Click the sub display area to enter to edit low power mode. When the low power consumption mode is turned on, an icon  will appears on the main interface, then the touch screen will be turned off, and the system will enter a low power consumption state. At this time, the screen needs to be awakened by a physical button. When the low power mode is turned off, the touch screen will not be turned off.

3.5 Calibration

3.5.1 Calibration Interface

Press the Cal icon in menu bar to enter the system calibration. System calibration includes pressure calibration, atmospheric pressure calibration, 4-20 mA calibration (If the 4-20 mA module is enabled, the 4-20 mA calibration interface will appear), input the default calibration password 123456 to enter the system calibration settings, as shown in Figure 22.

1. Click the title bar "IPM", you can switch between the calibration types, it includes pressure calibration, atmospheric pressure calibration, 4-20 mA calibration (If the 4-20mA module is enabled, the 4-20mA calibration interface will appear).
2. Click the main display area to switch the calibration type. Display 1 means single-point calibration, 2 means two-point calibration, 3 means three-point calibration, CANCEL means cancel calibration, and ZERO means cancel zeroing.
3. When it has been calibrated, the sub display area displays the calibration date. When there is no calibration, the sub display area displays "------".
4. After finishing the calibration setting, click “OK” to enter calibration.



Figure22 Calibration Interface

3.5.2 Pressure Calibration

1. Two-point calibration. The default calibration points are the upper and lower limits of the range. The sequence of calibration is to calibrate the lower limit first and then the upper limit, as shown in Figure 23 for the lower limit of calibration. Click the title bar to switch the pressure unit. The main area displays the original pressure value 000001, the left side of the sub display area P1 represents the first point of calibration, and the right side represents the standard value. Click to edit. Click OK to go to the next point.
2. Carry out calibration to each point in order, and finally submit the calibration data to complete this calibration.
3. Three-point calibration, the default calibration points are the lower limit of the range, zero, and the upper limit of

the range. The sequence of calibration is to calibrate the lower limit first, then zero point, and finally the upper limit. After the upper limit is finished, return to the calibration setting interface.

4. Cancel calibration: In the pressure calibration setting interface, click the main display area to the cancel calibration interface, and click OK to cancel the calibration data.
5. Cancel zero: In the pressure calibration setting interface, click the main display area to the cancel zero interface, click OK to cancel the zero.



Figure23 Pressure calibration interface

3.5.3 Barometric Calibration

Provide single point calibration, two points calibration and cancel calibration. Before the calibration, please open the battery cover of the gauge, and connect the pressure hose to the Φ4 pressure port, as shown in figure 24.

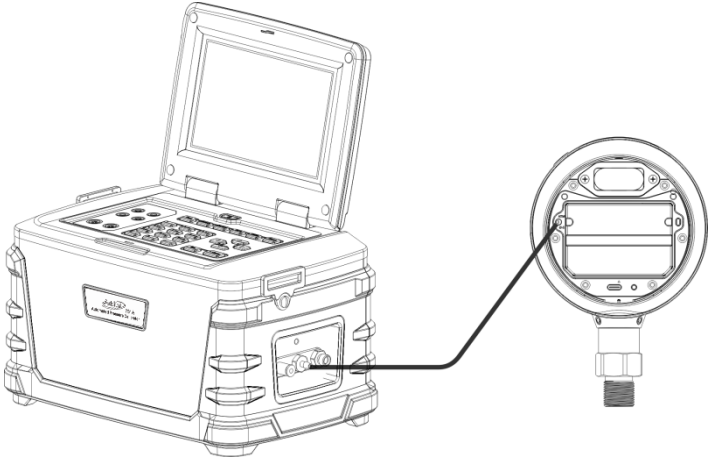

Figure24 Barometric calibration connection

The barometric calibration interface is shown in Figure 25. Click the main value display area to switch the selection of barometric pressure calibration. Display 1 means barometric pressure single point calibration, 2 means barometric pressure two points calibration, and CANCEL means cancel calibration. Click OK to enter the barometric pressure

calibration interface, the main display area displays the measured value of barometric pressure, the left side of the sub display area indicates the current calibration point, and the right side indicates the standard value, it can be clicked to edit. Click OK to enter the next point, and finally submit the calibration data to complete the calibration.



Figure25 Barometric calibration selection interface

3.5.4 (4~20) mA Calibration (only available when using (4~20) mA module)

When the (4~20) mA module is enabled, the module can be calibrated. Two-point calibration and cancel calibration are provided. The main display area displays the output value, the left side of the sub display area displays the calibration point, and the right area displays the entered standard value. Click OK to go to the next point.

3.6 OP List Settings

Press the OP List icon in menu bar to enter the interface, click the title bar on the OP List interface to switch different displays, including: version information, resolution setting, automatic backlight time setting, barometric pressure and temperature display, overpressure record information, touch sound, data record storage formatting operation , restore to factory settings,low power consumption mode on/off setting (this setting appears when the optional module is not a (4~20) mA module).

3.6.1 Version Information

The title bar displays VERSION. Press the main display area to switch version information, including system software version, hardware version, and pressure module version.

3.6.2 Resolution Settings

The title bar displays RESOLUT, press the main display area shortly to edit he resolution. It supports 4 digits, 5 digits, and 5 and a half digits resolution settings.

3.6.3 Auto-Backlight Time Settings

The title bar displays LIGHT. Press the main display area to edit the time to automatically turn off the backlight. It supports 10 seconds, 20 seconds, 30 seconds, 60 seconds, and ON (the backlight is always on).

3.6.4 Barometric Pressure and Temperature Display

The title bar displays ATMTEM. Press the main display area to edit the atmospheric pressure or temperature display. It supports setting the secondary display area of the main display to turn on and off the atmospheric pressure and temperature display.

3.6.5 Overpressure Record Information

The title bar displays OVER P, Press the main display area to switch to the next overpressure record information, the main display area displays the total number of overpressure records, the current serial number, the sub display area

displays the overpressure value, short press the sub display area to switch to display the date and time of the overpressure record.

3.6.6 Touch Sound Settings

The title bar displays TOUCH, Press the main display area to edit the touch sound settings, it supports touch sound on and off.

3.6.7 Data Record Storage formatting Operation

The title menu displays FORMAT, click OK, it will remind you to enter password. The default password is: 123456. Once successfully enter password, the equipment will proceed to date record storage formatting operation and automatic rebooting.

3.6.8 Restore to Factory Settings

The title bar displays RESTORE, click ok it will remind you to enter password .The default password is: 123456, click OK means execute restore to factory settings operation, click MENU or press power button means back to previous menu.

3.7 Malunction Information

Press the Check icon in the menu bar to enter the equipment malfunction interface. When there is nothing wrong, it will display NORMAL. When there is malfunction, the corresponding fault code will be displayed. Click the main display area to switch to display different fault codes.

Table10 Malfunction information list

Error codes	Description	Solution
101	Ferroelectric self-test failed	Restore to factory settings
102	Pressure module init failed	Check the pressure module connections
103	Barometric module init failed	Please contact the manufacturer
104	Barometric module calibration init failed	Please contact the manufacturer
105	Flash init failed	Enter secondary menu OPList(Refer to 3.6.7),switch to FORMAT display ,proceed data record storage formatting operation. If the fault still, please contact the manufacturer.
106	Bluetooth module init failed	Switch off and start again, if the fault still, please contact the manufacturer
107	Battery low voltage	Change the battery
108	Battery over voltage	Change the battery
1001	Pressure module: constant circuit resistance failed	Pressure module problem, please contact the manufacturer
1002	Pressure module: internal baseline failed	
1003	Pressure module: AVDD failed	

1011	Pressure module: VCC power voltage failed	
1021	Pressure module: MCU failed	
1031	Pressure module: AD7124 CRC failed	
1041	Pressure module: AD ALDO failed	
1051	Pressure module: AD DLDO failed	
1061	Pressure module: AD failed	
1071	Pressure module: AD internal baseline failed	
1081	Pressure module: TMP failed	
1091	Pressure module: pressure sensor open circuit failed	
1092	pressure sensor short circuit failed	
1101	Pressure module: constant circuit resistance failed	
1111	Pressure module: constant voltage excitation failed	
1121	Pressure module: internal EEPROM failed	
1131	Pressure module: external EEPROM failed	

Note: In case of it cannot be turned on, please firstly open the cover of the pressure gauge, replace the battery and press the power button to turn it on again. If it still, please contact the manufacturer.

3.8 Operation Error Codes

When performing function operations or information editing operations on the screen, since the screen cannot display detailed text, the pressure gauge will prompt in the form of an error codes.

Table11 Operation Error codes list

Error codes	Description	Measure
001	Password wrong	Check the password
002	Parameter beyond the range	The entered value is beyond the gauge's range, enter a new value
003	Operation execution failed	Try it again
004	Flash initialization failed when performing data recording	Enter secondary menu OPList(Refer to 3.6.7),switch to FORMAT display ,proceed data record storage formatting operation. If the fault still, please contact the manufacturer.

4.Copyright

Additel owns all copyrights to this system and reserves all rights. Please respect the rights of our company.

Appendix A：RS232 module DB9 Pins Description

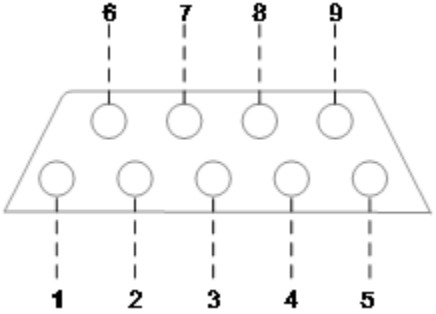

Figure 26 RS232 module DB9 female pins description

Table12 RS232 module DB9 pins description

Pins	Description
1	Reserved
2	TXD
3	RXD
4	Reserved
5	GND

6	Reserved
7	Reserved
8	Reserved
9	Reserved

Appendix B：RS485 module DB9 Pins Description

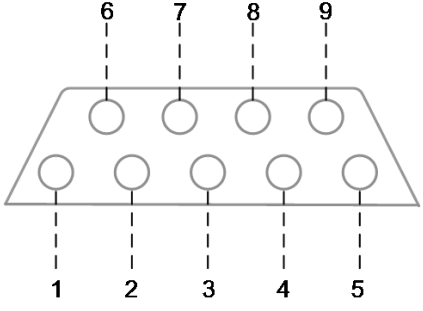

Figure27　RS485 module DB9 female pins description

Table13 RS485 module DB9 pins description

Pins	Description
1	Reserved
2	Reserved
3	Reserved
4	Reserved
5	GND
6	D+
7	Reserved
8	Reserved
9	D-

Appendix C：SWITCH Module Pins Description

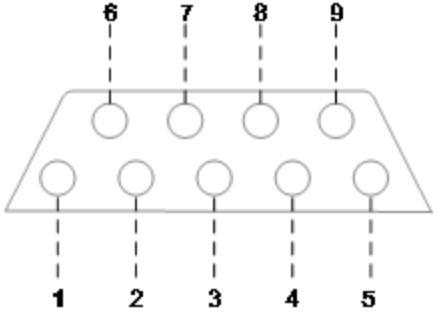

Figure28 SWITCH module pins description

Table14 SWITCH module pins description

Pins	Description
1	SW1
2	Reserved
3	Reserved
4	Reserved
5	GND
6	Reserved

7	Reserved
8	SW2
9	Reserved

Note:

[1] Switch node output characteristics: open-drain output, internal resistance of 100Ω when turned on, and maximum external voltage of 30V.

[2] Ex gauges do not support SWITCH module.

Appendix D：2 Wire (4~20) mA Module Pins Description

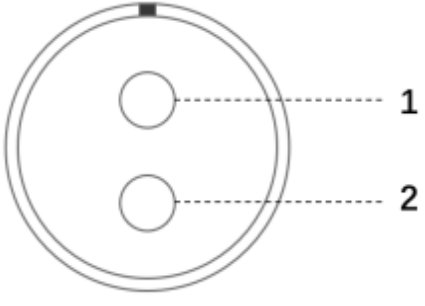

Figure29　2 wire (4~20)mA module female pins description

Table14 2 wire (4~20)mA module female pins description

Pins	Description
1	L00P+[1]
2	L00P-

Note:

[1] Power supply range：DC 12V~36V

[2] Transmission output accuracy level (including pressure, -10℃~50℃ full temperature compensation): 0.05/0.1/0.2

[3] Only non-Ex proof version is supported

Appendix E: Special Notice for ADT685Ex Cable

Any data download devices connected to the Digital Pressure Gauge shall be approved SELV or Class 2 equipment against IEC 60950 or an equivalent IEC standard. The maximum voltage Um from the device shall not exceed 6 Vdc for USB port and 16 Vdc for RS232 port.

Table15 ADT685Ex cable list

No.	Ex cable name
1	Ex cable name
2	EX USB Cable

Note: Ex-proof cables can only be used in safe areas, do not use in hazardous areas.

Appendix F：ADT685Ex EX-Proof Description

Conform the CE, CSA, UKCA and IECEx certification:

1. ATEx certificate：II 1 G Ex ia IIC T4 Ga

   Ta=-20℃to+50℃

   IECEx SIR 21.0018X

   CSANe 21ATEx2078X

1. CSA certificate：Class I,Division 1,Groups A,B,C and D,T4

   Class I,Zone 0,AEx ia IIC T4 Ga

   CSA 21CA 80045682X

   Ta=-20℃to+50℃ Ex ia IIc T4 Ga

Alkaline, AA	Panasonic Powerline	LR6A
Alkaline, AA	Rayovac	815
Alkaline, AA	Maxwell	LR6
Alkaline, AA	Energizer E91	E91

Additel Corporation
2900 Saturn Street #B
Brea,CA 92821 USA
Phone: 714-998-6899
Email: service@additel.com
website: www.additel.com