User Manual

HPS Series
High Power Programmable DC Power Supplies



BK PRECISION

Contents

1 Compliance Information 4
1.1 EMC 4
1.2 IEC Measurement Category & Pollution Degree Definitions 5
1.3 Product End-of-Life Handling 6
1.4 Terms and Symbols 6

2 Safety Notices 8

3 General Information 14
3.1 Product Overview 14
3.2 Contents 15
3.3 Features 15
3.4 Product Dimensions 16
3.5 Front Panel Overview 17
3.6 Display Overview 18
3.6.1 Monitor 19
3.6.2 Control Mode 19
3.6.3 Operating Status 20
3.6.4 Operating Mode 20
3.7 Rear Panel Overview 21

4 Getting Started 22
4.1 Input Power 22
4.2 Output Connection 24
4.2.1 Current Carrying Capacity 24
4.2.2 Noise and Impedance Effects 25
4.2.3 Remote Sense 25
4.2.3.1 Remote Sense Not Used 25
4.2.3.2 Remote Sense Connected to Load 26
4.2.3.3 Implementing Relays To Load Draft 27
4.3 Preliminary Check 28

5 Setup Menu 29
5.1 Graph 30
5.1.1 XY Graph 30
5.1.2 yT Graph 31
5.2 Configuration 32
5.3 Protection 33
5.4 Interfaces 35
5.4.1 LAN 36

5.4.2 RS232 . . . 38
5.4.3 Analog Interface . . . 40
5.4.3.1 Monitor Voltage Set Point V_{mon} . . . 42
5.4.3.2 Monitor Current Set Point I_{mon} . . . 43
5.4.3.3 Monitor Power Output P_{mon} . . . 44
5.4.3.4 Monitor OVP Set Point OVP_{mon} . . . 45
5.4.3.5 Soft-Interlock . . . 46
5.4.3.6 Constant Voltage Mode (CV) . . . 47
5.4.3.7 Monitor Output Voltage (V_{istmon}) . . . 47
5.4.3.8 Block $Output_{mon}$ . . . 47
5.4.3.9 10 V-Vref . . . 48
5.4.3.10 Voltage Set Point V_{set} . . . 49
5.4.3.11 Current Set Point V_{set} . . . 49
5.4.3.12 OVP Set Point OVP_{set} . . . 50
5.4.3.13 External Control . . . 50
5.4.3.14 Block $Output_{set}$ . . . 50
5.4.3.15 Monitor Output Current (I_{istmon}) . . . 51
5.4.3.16 5 V Source . . . 52
5.4.3.17 Error . . . 52
5.5 Controller List . . . 53
5.5.1 PV_{Sim} Mode Controller . . . 54
5.5.2 VIP Mode Controller . . . 54
5.5.3 VIR Mode Controller . . . 55
5.5.4 Controller Equation . . . 56
5.6 Master/Slave . . . 57
5.6.1 Off . . . 57
5.6.2 Parallel . . . 58
5.6.3 Series . . . 59
5.6.4 Independent . . . 60
5.7 Info . . . 61
5.8 Factory Settings . . . 61

6 Data Log Function 62

7 Script Mode 63
7.1 Load/Execute a Script . . . 63
7.2 Script Commands . . . 64
7.3 Script Example . . . 65

8 Service Information 66

9 LIMITED THREE-YEAR WARRANTY 67

Compliance Information

1.1 EMC

EC Declaration of Conformity - EMC

Compliance was demonstrated to the following specifications listed in the Official Journal of the European Communities: EMC Directive 2014/30/EU.

EN 61010-1:2010 Safety requirements for electrical equipment for measurement, control, and laboratory use Part 1: General requirements

1.2 IEC Measurement Category & Pollution Degree Definitions

Measurement Category (CAT) - classification of testing and measuring circuits according to the types of mains circuits to which they are intended to be connected.

Measurement Category other than II, III, or IV : circuits that are not directly connected to the mains supply.

Measurement Category II (CAT II) : test and measuring circuits connected directly to utilization points (socket outlets and similar prints) of the low-voltage mains installation.

Measurement Category III (CAT III) : test and measuring circuits connected to the distribution part of a building's low-voltage mains installation.

Measurement Category IV (CAT IV) : test and measuring circuits connected at the source of the building's low-voltage mains installation.

Mains Isolated : is for measurements performed on circuits not directly connected to a mains supply.

Pollution - addition of foreign matter, solid, liquid, or gaseous (ionized gases) that may produce a reduction of dielectric strength or surface resistivity.

Pollution Degree 2 (P2) - only non-conductive pollution occurs except that occasionally a temporary conductivity caused by condensation is expected

1.3 Product End-of-Life Handling

The equipment may contain substances that could be harmful to the environment or human health if improperly handled at the product's end of life. To avoid release of such substances into the environment and to reduce the use of natural resources, we encourage you to recycle this product to an appropriate system that will ensure that most of the materials are reused or recycled appropriately.



This product is subject to Directive 2012/19/EU of the European Parliament and the Council of the European Union on waste electrical and electronic equipment (WEEE), and in jurisdictions adopting that Directive, is marked as being put on the market after August 13, 2005, and should not be disposed of as unsorted municipal waste. Please utilize your local WEEE collection facilities in the disposition of this product.

1.4 Terms and Symbols

Terms



A caution statement calls attention to an operating procedure, practice, or condition, which, if not followed correctly, could result in damage to or destruction of parts or the entire product.



A warning statement calls attention to an operating procedure, practice, or condition, which, if not followed correctly, could result in injury or death to personnel.



A note statement calls attention to an operating procedure, practice, or condition, which, should be noted before proceeding.

Symbols



WARNING - HIGH VOLTAGE - possibility of electric shock.



CAUTION – Statements or instructions that must be consulted in order to find out the nature of the potential hazard and any actions which must be taken.



On (Supply). This is the AC mains connect/disconnect switch on the front of the instrument.

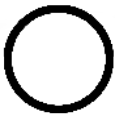

Off (Supply). This is the AC mains connect/disconnect switch on the front of the instrument.



Alternating current



Chassis (earth ground) symbol



Earth (ground) TERMINAL - Refer to the instructions accompanying this symbol in this manual.

Safety Notices

The following safety precautions apply to both operating and maintenance personnel and must be followed during all phases of operation, service, and repair of this instrument.

Before applying power to this instrument:

- Read and understand the safety and operational information in this manual.
- Apply all the listed safety precautions.
- Verify that the voltage selector at the line power cord input is set to the correct line voltage. Operating the instrument at an incorrect line voltage will void the warranty.
- Make all connections to the instrument before applying power.
- Do not operate the instrument in ways not specified by this manual or by B&K Precision.

Failure to comply with these precautions or with warnings elsewhere in this manual violates the safety standards of design, manufacture, and intended use of the instrument. B&K Precision assumes no liability for a customer's failure to comply with these requirements.

Electrical Power

This instrument is intended to be powered from a CATEGORY II mains power environment. The mains power should be 115 V RMS or 230 V RMS. Use only the power cord supplied with the instrument and ensure it is appropriate for your country of use.



Do not use this instrument in an electrical environment with a higher category rating than what is specified in this manual for this instrument.



You must ensure that each accessory you use with this instrument has a category rating equal to or higher than the instrument's category rating to maintain the instrument's category rating. Failure to do so will lower the category rating of the measuring system.

Ground the Instrument

WARNING

To minimize shock hazard, the instrument chassis and cabinet must be connected to an electrical safety ground. This instrument is grounded through the ground conductor of the supplied, three-conductor AC line power cable. The power cable must be plugged into an approved three-conductor electrical outlet. The power jack and mating plug of the power cable meet IEC safety standards.

WARNING

Do not alter or defeat the ground connection. Without the safety ground connection, all accessible conductive parts (including control knobs) may provide an electric shock. Failure to use a properly-grounded approved outlet and the recommended three-conductor AC line power cable may result in injury or death.

WARNING

Unless otherwise stated, a ground connection on the instrument's front or rear panel is for a reference of potential only and is not to be used as a safety ground. Do not operate in an explosive or flammable atmosphere.

Environmental Conditions

This instrument is intended to be used in an indoor pollution degree 2 environment. The operating temperature range is 0°C to 40°C and 20% to 80% relative humidity, with no condensation allowed.

Measurements made by this instrument may be outside specifications if the instrument is used in non-office-type environments. Such environments may include rapid temperature or humidity changes, sunlight, vibration and/or mechanical shocks, acoustic noise, electrical noise, strong electric fields, or strong magnetic fields.

WARNING

Do not operate the instrument in the presence of flammable gases or vapors, fumes, or finely-divided particulates.

The instrument is designed to be used in office-type indoor environments. Do not operate the instrument

- **In the presence of noxious, corrosive, or flammable fumes, gases, vapors, chemicals, or finely-divided particulates.**
- **In relative humidity conditions outside the instrument's specifications.**

WARNING

- **In environments where there is a danger of any liquid being spilled on the instrument or where any liquid can condense on the instrument.**
- **In air temperatures exceeding the specified operating temperatures.**
- **In atmospheric pressures outside the specified altitude limits or where the surrounding gas is not air.**
- **In environments with restricted cooling air flow, even if the air temperatures are within specifications.**
- **In direct sunlight.**

Do not operate instrument if damaged

WARNING

If the instrument is damaged, appears to be damaged, or if any liquid, chemical, or other material gets on or inside the instrument, remove the instrument's power cord, remove the instrument from service, label it as not to be operated, and return the instrument to B&K Precision for repair. Notify B&K Precision of the nature of any contamination of the instrument.

WARNING

Hazardous voltages may be present in unexpected locations in circuitry being tested when a fault condition in the circuit exists.

Clean the instrument only as instructed

WARNING

Do not clean the instrument, its switches, or its terminals with contact cleaners, abrasives, lubricants, solvents, acids/bases, or other such chemicals. Clean the instrument only with a clean dry lint-free cloth or as instructed in this manual. Not for critical applications.

Do not touch live circuits

WARNING

Instrument covers must not be removed by operating personnel. Component replacement and internal adjustments must be made by qualified service-trained maintenance personnel who are aware of the hazards involved when the instrument's covers and shields are removed. Under certain conditions, even with the power cord removed, dangerous voltages may exist when the covers are removed.

To avoid injuries, always disconnect the power cord from the instrument, disconnect all other connections (for example, test leads, computer interface cables, etc.), discharge all circuits, and verify there are no hazardous voltages present on any conductors by measurements with a properly-operating voltage-sensing device before touching any internal parts. Verify the voltage-sensing device is working properly before and after making the measurements by testing with known-operating voltage sources and test for both DC and AC voltages.

Do not attempt any service or adjustment unless another person capable of rendering first aid and resuscitation is present.

General Safety

WARNING

Do not insert any object into an instrument's ventilation openings or other openings.

WARNING

This instrument is not authorized for use in contact with the human body or for use as a component in a life-support device or system.

Servicing

WARNING

Do not substitute parts that are not approved by B&K Precision or modify this instrument. Return the instrument to B&K Precision for service and repair to ensure that safety and performance features are maintained.

WARNING

Fuse replacement must be done by qualified service-trained maintenance personnel who are aware of the instrument's fuse requirements and safe replacement procedures. Disconnect the instrument from the power line before replacing fuses. Replace fuses only with new fuses of the fuse types, voltage ratings, and current ratings specified in this manual or on the back of the instrument. Failure to do so may damage the instrument, lead to a safety hazard, or cause a fire. Failure to use the specified fuses will void the warranty.

For continued safe use of the instrument

- Do not place heavy objects on the instrument.
- Do not obstruct cooling air flow to the instrument.
- Do not place a hot soldering iron on the instrument.
- Do not pull the instrument with the power cord, connected probe, or connected test lead.
- Do not move the instrument when a probe is connected to a circuit being tested.

General Information

3.1 Product Overview

The B&K Precision models HPS20K800 and HPS20K1500 represent high-voltage programmable DC power supplies featuring a single output capable of delivering a maximum power output of up to 20 KWs. When up to 8 power supplies are connected in parallel, the maximum output power can extend to 160 kW.

These power supplies offer full programmability and control through various interfaces, including analog programming, RS232 and Ethernet. The front numerical keypad and rotary knob provide a user-friendly interface for adjusting voltage, current, operational functions, and enabling/disabling the output. The HPS series is equipped with overvoltage protection (OVP) and overcurrent protection (OCP) features to maintain the output voltage and current within specified safety levels, preventing damage to the Unit Under Test (UUT).

Model	HPS20K800	HPS20K1500
Rated Voltage	800 V	1500 V
Rated Current	25 A	13.4 A
Power	20 kW	

Table 3.1 HPS Series Models



Figure 3.1 HPS

3.2 Contents

Please inspect the instrument mechanically and electrically upon receiving it. Unpack all items from the shipping carton, and check for any obvious signs of physical damage that may have occurred during transportation. Report any damage to the shipping agent immediately.

Save the original packing carton for possible future reshipment. Every instrument is shipped with the following contents:

- 1 x HPS20k800 or HPS20K1500 Power Supply
- 1 x Certificate of Calibration
- 1 x Test Report

NOTICE

Ensure the presence of all the items above.
Contact the distributor or B&K Precision if anything is missing.

3.3 Features

- 5-inch TFT touchscreen display for intuitive control
- Efficiency up to 94%
- Built-in voltage and current measurement
- Master/slave mode provides up to 160 kW with 8 units connected in parallel
- Galvanically isolated analog control and monitoring interface
- OVP and under voltage protection
- Adjustable voltage and current rise time
- Fast transient response time < 3 ms
- Thermostatically-controlled fans help minimize noise
- Datalogging to USB
- Output on timer
- RS232 and LAN interfaces
- LabVIEW^{TM} drivers provided

3.4 Product Dimensions

All models are designed to fit in a standard 19-inch rackmount. The dimensions are shown in **table 3.2**.

Model	Dimensions (W x H x D)	Weight
HPS20K800	19” x 5.3” x 24.2” (482 x 132.5 x 614.7 mm)	82 lbs. (37 kg)
HPS20K1500	19” x 5.3” x 24.2” (482 x 132.5 x 614.7 mm)	82 lbs. (37 kg)

Table 3.2 Dimensions and Weight

Technical Drawings

Units are in mm

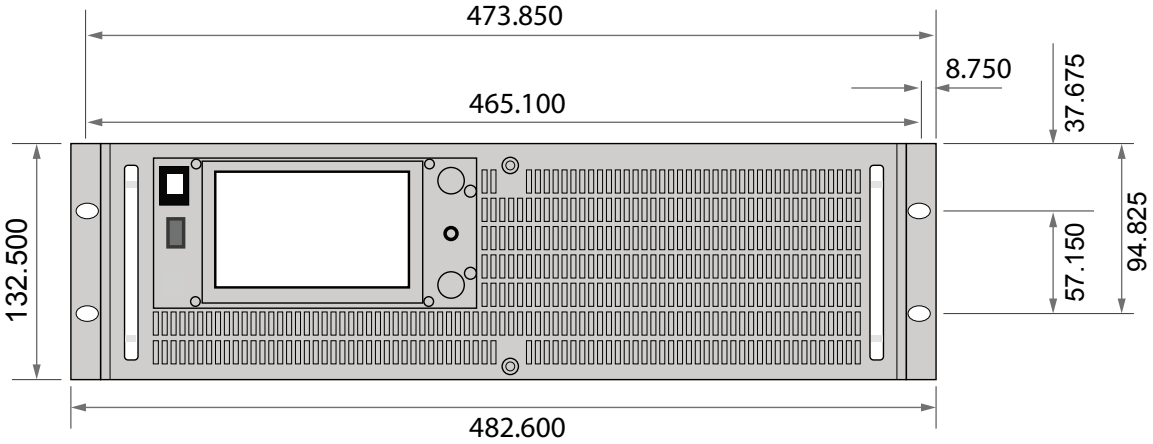

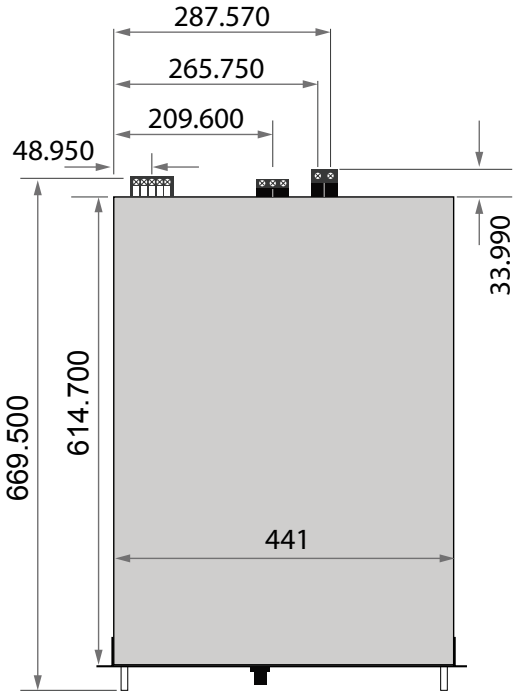

3.5 Front Panel Overview

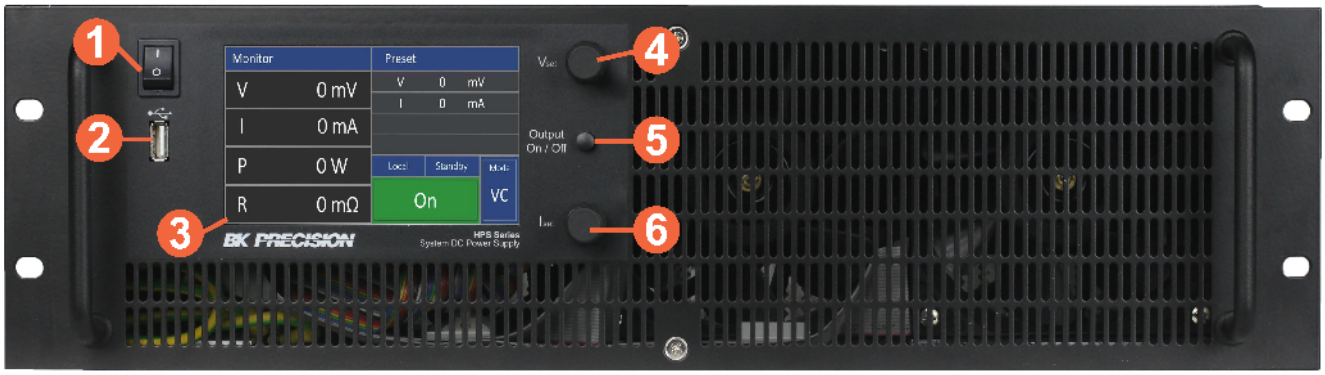

Figure 3.2 Front Panel

Item	Name	Description
1	Power Switch	Toggles the instrument ON or OFF.
2	USB Host Port	USB port used to connect a flash drive.
3	Display	TFT-Touch-Display.
4	Voltage Rotary Knob	Encoder used to configure the voltage level.
5	Output Power Button	Toggles the output ON or OFF.
6	Current Rotary Knob	Encoder used to configure the current level.

Table 3.3 Front Panel Overview

3.6 Display Overview

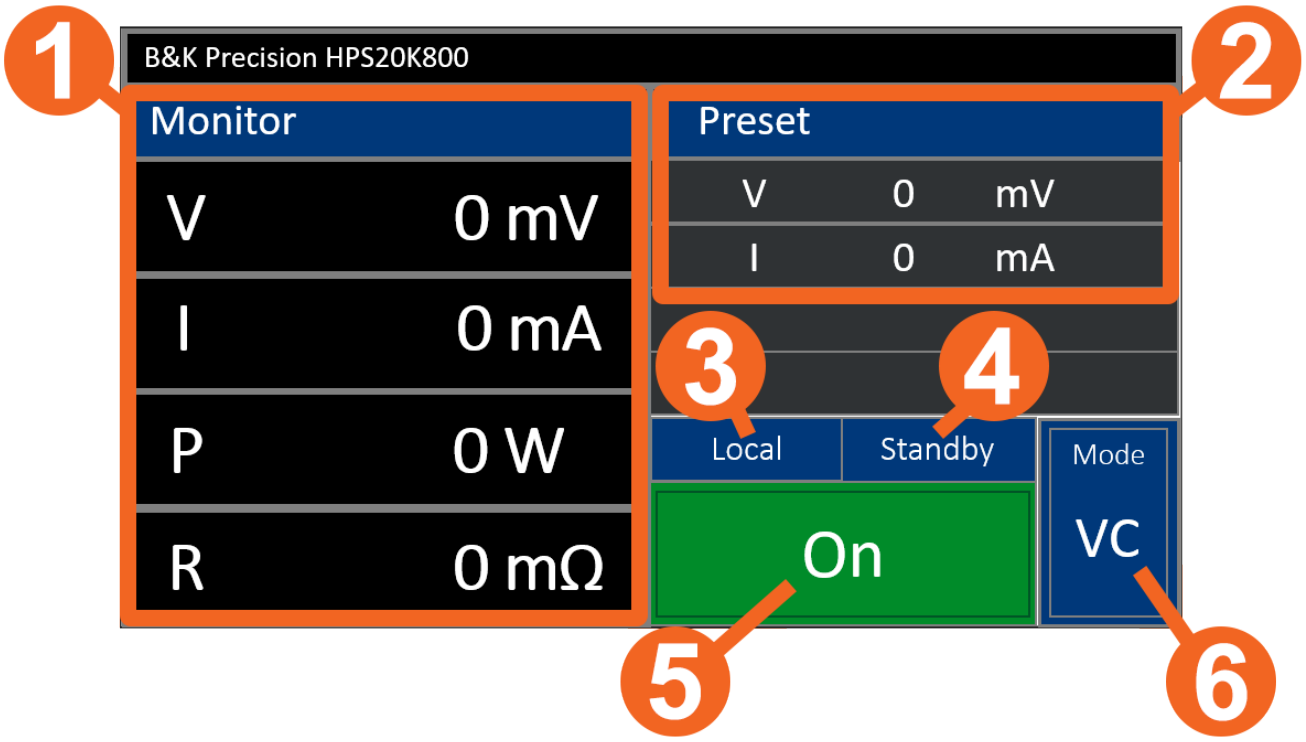

Figure 3.3 Display Overview

Item	Name	Description
1	Monitor	Displays the measured voltage and current, along with the calculated power and resistance.
2	Preset	Displays the set voltage and current level.
3	Control Mode	Displays the control mode of the instrument.
4	Operating Status	Displays the operation mode of the output.
5	Output Status	Displays the status of the output.
6	Operating Mode	Displays the set operation mode of the output.

Table 3.4 Display Overview

3.6.1 Monitor

The following values are displayed on the monitor section of the display.

V The measured voltage at the output terminals.

I The measured current at the output terminals.

P The calculated power at the output terminals based on the measured voltage and current ($P = V \times I$). This value is only available in UIP mode.

R_i The calculated resistance at the output terminals based on the measured voltage and current ($R = V \div I$). This value is only available in UIR mode.

V_{mpp} The measured voltage at the output terminals. This value is only available in PV_{sim} mode.

I_{mpp} The measured current at the output terminals. This value is only available in PV_{sim} mode.

3.6.2 Control Mode

Loc The control mode is configured as local, indicating that all adjustments and operations are carried out using the front panel.

Scr The control mode is configured as script, indicating that all adjustments and operations are carried out based on the loaded script. For more details refer to section ??.

AI The control mode is configured as analog interface, indicating that all adjustments and operations are carried out using the external source used to control the analog interface. For more details refer to **section 5.4.3**.

Rem The control mode is configured as remote, indicating that all adjustments and operations are carried out using the connected remote interface. For more details refer to section ??.

LLO The control mode is configured as locked, indicating that the front panel is locked.

Dis The control mode is configured as disabled, indicating that the unit is locked via the interlock input in the rear panel.

3.6.3 Operating Status

Standby Standby mode

U-Limit Voltage limitation mode

I-Limit Current limitation mode

P-Limit Power limitation mode

OVP deactivation of the unit by over voltage protection mode

3.6.4 Operating Mode

Selecting operating modes is only possible when the main display is active. Use the rotary pulse encoder to shift focus (highlight the selected mode) among the various modes. Once the desired option is in focus, turn the rotary pulse encoder to choose the operating mode. It's important to ensure that the unit is in standby mode; otherwise, the 'Mode' option will not be selectable.

UI Voltage and current limitation. In UI mode, the set values for voltage and current are transferred directly to the switch mode regulator. There is no additional digital control.

UIP Voltage, current and power limitation. In UIP mode, the set values for voltage and current are transferred directly to the switch mode regulator. If the output current exceeds the previously adjusted limit value, the current set point will be regulated.

UIR Voltage and current limitation, simulated internal resistance. In UIR mode, the voltage set point is regulated by simulating the internal resistance of the power supply. The set value for current limiting is transferred directly to the switch mode regulator

PV_{sim} Simulation of a photovoltaic characteristic. In PVsim mode, the diagram of a PV generator is simulated. Given values are open-circuit voltage Uo, short-circuit current Ik, as well as the amounts of voltage and current by which the PV generator delivers the maximum power (Umpp, Impp). Parameters can be found in the specification sheet of the simulated PV generator.

Values for Umpp may be in a range from 0.6 to 0.95 * U.
Values for Impp may be in a range from 0.6 to 0.95 * I.

User Simulation of a user-defined characteristics. In script mode, the unit is governed by the memory card. The 'Mode' display indicates the current operating mode as 'UI'. In the lower right corner of the display, the term 'Scr' is shown, signaling the selection of script operation. It's important to note that this option cannot be selected if there is no memory card inserted into the slot. For detailed guidance on memory card control and instructions on constructing a script, refer to the section titled Script Control.

3.7 Rear Panel Overview



Figure 3.4 Display Overview

Item	Name	Description
1	Master/Slave Input	Connects to instruments to achieve synchronization or parallel operation.
2	Analog Interface	Provides means to integrate the instrument with other analog systems. For more details refer to **section 5.4.3**.
3	Output Terminals	Provide the output voltage and current generated by the power supply.
4	Remote Sense	Sense lines used to compensate for voltage drops.
5	RS232 Interface	Connect a simple null modem cable to remotely control the unit.
6	LAN Interface	Connect a Cat 5/6 Ethernet straight-through patch cable to remotely control the unit.
7	AC Input	Terminal used to connect external ac power that power the instrument.
8	Earth Ground	Provides a zero potential voltage reference and a dissipation point for interference, transient voltages and static

Table 3.5 Rear Panel Overview

Getting Started

Before connecting and powering up the instrument, please review the instructions in this chapter.

4.1 Input Power

NOTICE The AC input line voltage rating is permanently built into the unit and cannot subsequently be changed.

The HPS series is available with either of the two accessible AC inputs:

	208V Configuration	400V Configuration
AC Line Input	187 - 229 Vac, 47/63 Hz	360 - 440 Vac, 47/63 Hz
AC Line Phase	3 Phase	

Table 4.1 AC Input Configurations

CAUTION **Connection of either power supply to an AC power source must be made by a qualified electrician in accordance with local electrical codes.**

WARNING **CONNECTION TO AC SOURCE The power supply must be connected to the AC mains through a protective device with ratings as follows:**

At 3P/208VAC - use a 125 A circuit breaker type D/K

At 3P/400VAC - use a 63 A circuit breaker type D/K

The POWER on/off switch is not the main disconnect device and does not completely disconnect all circuits from the AC mains. A disconnect device, either a switch or circuit breaker for permanent or multi-phase configurations must be provided in the final installation.

The disconnect device must comply with UL/CSA/EN 61010-1 requirements. It shall be in close proximity to the equipment, shall be easily accessible, and shall be marked as the disconnect device for this equipment. The disconnect device must be consistent with the ratings shown above.

An Emergency Off (EMO) switch should be considered for bench and for rack use. It should be positioned for accessibility during normal use.

WARNING **Verify the configuration of your instrument before you setup**

Before connecting to an external power source, be sure that the source corresponds with the configuration of your instrument. If the configuration is compatible with the power source verify that the power switch is in the OFF position and verify that the AC power cord, including the extension line, is compatible with the rated voltage/current and that there is sufficient circuit capacity for the power supply. Once verified, connect the cable firmly.

WARNING

SHOCK HAZARD The power cable provides a chassis ground through the ground conductor. Be certain that the power cable has the ground conductor connected to earth ground at the source and instrument AC input connector.

FIRE HAZARD Use only the power cable that was supplied with your instrument. Using other types of power cables may cause overheating of the power cable and result in fire. Any misuse with wrong or unsafe cables will void the warranty.

4.2 Output Connection

It is recommended to use the proper wire and lug for the load wiring. The following factors are needed to take into consideration:

- Insulation rating of the wire
- Current carrying capacity of the wire
- Noise and impedance effects of the load lines
- Maximum load wiring length for remote sense operation

4.2.1 Current Carrying Capacity

As a minimum, load wiring must have a current capacity greater than the output current rating of the power source. This ensures that the wiring will not be damaged even if the load is shorted.

Table 4.2.1shows the maximum current rating, based on 450 A/cm², for various gauges of wire rate for 105°C operations. Operating at the maximum current rating results in an approximately 30°C temperature rise for a wire operating in free air.

When load wiring must operate in areas with elevated ambient temperatures or bundled with other wiring, use larger gauges or wiring rated for higher temperature.

Wire Size AWG	2/0	1/0	1	2	4	6	8	10	12	14
Max. Current(A)	303	247	192	155	97	61	36	21	16	10

Table 4.2 Current Carrying Capacity



Hazardous voltages may exist at the input terminals with a power source output greater than 40V. To protect personnel against accidental contact with hazardous voltages, ensure that the power source and its connections have no accessible live parts. Ensure that the load wiring insulation rating is greater than to the maximum output voltage of the power source. And, use the input protection cover.

4.2.2 Noise and Impedance Effects

To minimize noise pickup or radiation interference, use a shielded pair wiring or the shortest possible length for load wires. Connect the shield to the chassis via a rear panel mounting screw.

If shielding is impossible or impractical, simply twisting the wires together will offer some noise immunity. When using local sense connections, the user must use the largest practical wire size to minimize the effects of load line impedance on the regulation of the load.

4.2.3 Remote Sense

The HPS series provides sense lines to compensate the voltage drop created by long load lines.

HPS20K800	HPS20K1500
80 V	150 V

Table 4.3 Remote Sense Compensation

4.2.3.1 Remote Sense Not Used

When remote sense is not in use the sense lines must be short-circuited with correct polarity directly to the output connectors as shown in **figure 4.1**.



Figure 4.1 Remote Sense Not in Use

CAUTION **By no means, current may flow over the sense connectors.**

4.2.3.2 Remote Sense Connected to Load

Considered the following points when connecting the sense lines directly to the load or to the central load distribution point:

- remove existing sense cable bridges from the power supply
- directly connect the positive sense and negative sense with correct polarity to the load distribution point
- connect the positive sense and negative sense conductors to a 1-47 µF capacitor
- protect sense cable or at least twist + sense and - sense
- select load line cross section, so that voltage drop is < 0.4 V
- avoid overload of power supplies (voltage drop per line x current)

NOTICE If oscillation occurs after considering the items listed above please contact B&K Precision.

To ensure a proper use, a central load distribution situation is essential when connecting the HPS to multiple loads. For correct load distribution configure the loads in a radial distribution system. Loads configured in a parallel systems will lead to insufficient supply were loads after the initial load will not receive adequate current. In practice, it may occur that an optimal distribution is not possible. In these cases a mixed distribution must be used to ensure at least the largest consumers are supplied centrally.

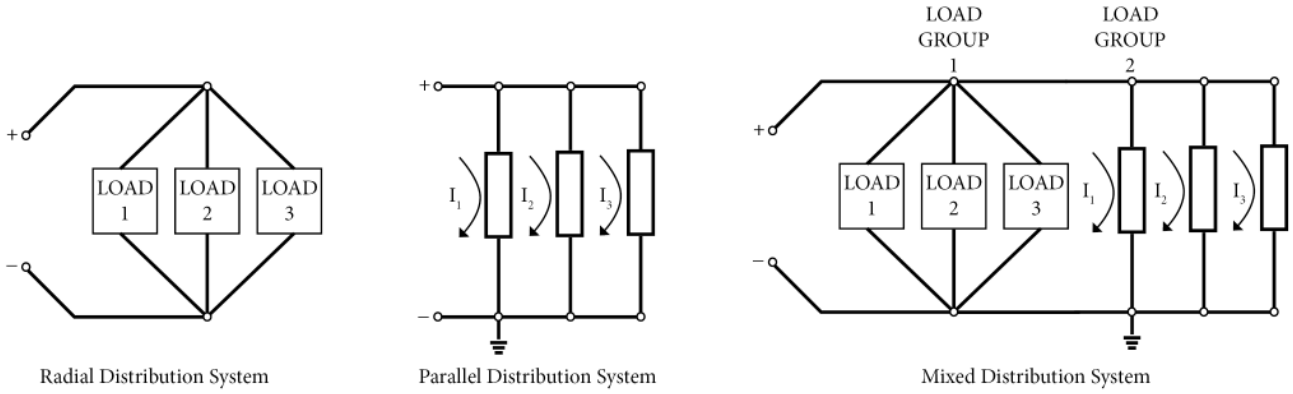

Figure 4.2 Distribution Systems

4.2.3.3 Implementing Relays To Load Draft

In an application involving the use of a relay to disconnect the load and simultaneous utilization of the Sense function, it is crucial to prevent the flow of load current through the sensing lines. Failure to do so can result in the sensor being damaged. The schematic representation of this scenario is depicted in **figure 4.3**

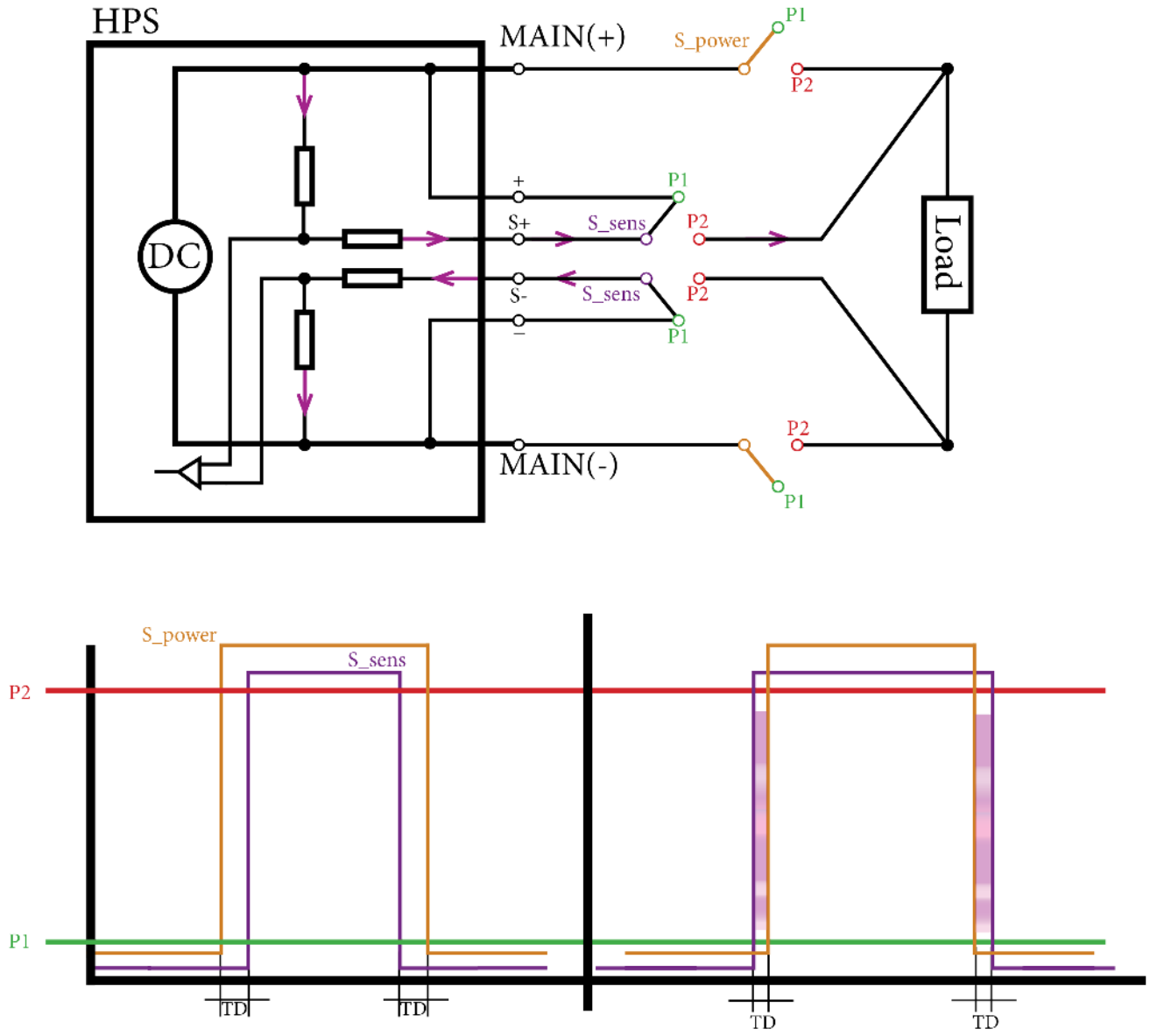

Figure 4.3 Remote Sense With Relays

The circuit breaker (S_power) must be closed when starting before the Sens (S_sens). When switching off, the Sens must first be opened and then the circuit breaker can be opened. Otherwise, a current flow may occur across the sensing line, and this may be particularly critical when disconnecting.

4.3 Preliminary Check

Complete the following steps to verify the Power supply is ready for use.

Verify AC Input Voltage

Verify and check to make sure proper AC voltages are available to power the instrument. The AC voltage range must meet the acceptable specification as explained in section "**2.1 Input Power**".

Connect Power & Self-Test

Connect AC power cord to the AC receptacle in the rear panel and press the power button. It will run through a self-test procedure initially before booting to the main screen.

Setup Menu

The configuration menu can be accessed by pressing the Vset knob. A horizontal menu will appear in the upper section of the display shown in **figure 5.1**.



Figure 5.1 Menu Bar

In the configuration menu the user can configure the **Operation Mode** as well as he instrument's settings. To navigate the Configuration menu turn the Vset knob. To select the highlighted option press the Vset knob, to return to the previous menu/page press the Iset knob.

The Setup menu allows for the following configurations.

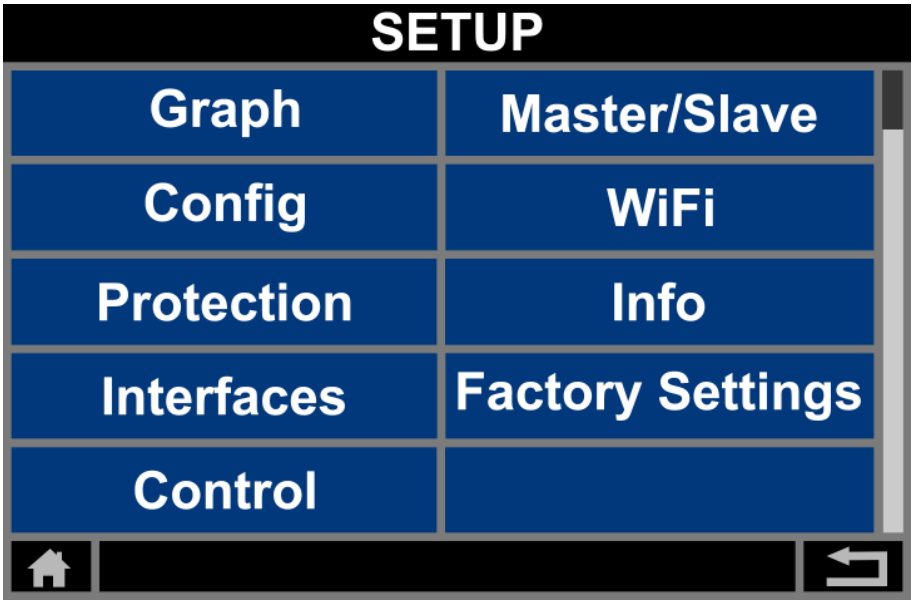

Figure 5.2 Setup Submenu

5.1 Graph 30
5.2 Configuration 32
5.3 Protection 33
5.4 Interfaces 35
5.5 Controller List 53
5.6 Master/Slave 57
5.7 Info 61
5.8 Factory Settings 61

5.1 Graph

Within the graph menu, two distinct graphs that present the unit output can be selected. Transitioning between these graphs is achievable either by clicking directly on the graph or pressing the Vset knob.

Positioned beneath the left-side of the graphs, in the Preset section, are the adjustable set values and operation mode, which are modifiable through the rotary encoder.

Positioned beneath the center of the graphs, is the Monitor section, where the output's measured values are displayed.

Positioned beneath the right-side of the graphs, are the Status section and the Off/On button. The output can be enabled/disabled by pressing the Off/On button.

5.1.1 XY Graph

In the XY graph, the current is plotted on the Y-axis and the voltage on the x-axis. The red frame represents the maximum limits defined by the user under the **Configuration** submenu.

The yellow X symbol represents the current operating point.

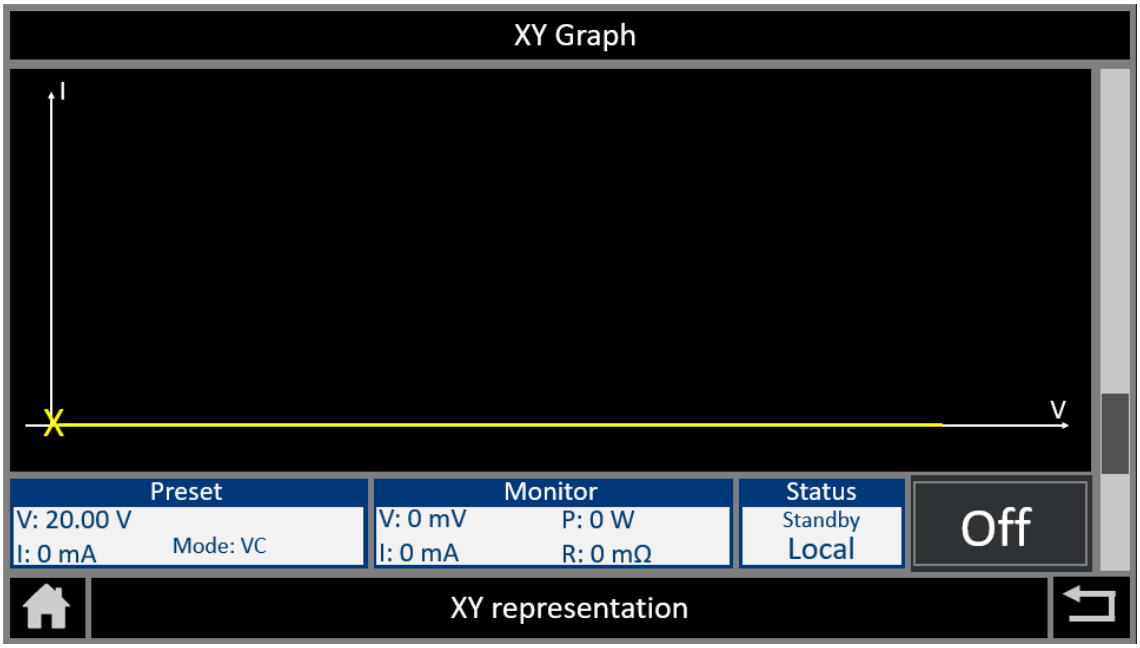

Figure 5.3 XY Graph

5.1.2 yT Graph

In this graphical depiction, the current (I), voltage (V), and power (P) are graphed along the Y-axis, while time (t) is represented on the X-axis.

During operation, the graph refreshes every 500 ms, progressing from right to left. In standby mode, the recording ceases.

NOTICE The resolution is automatically configured.

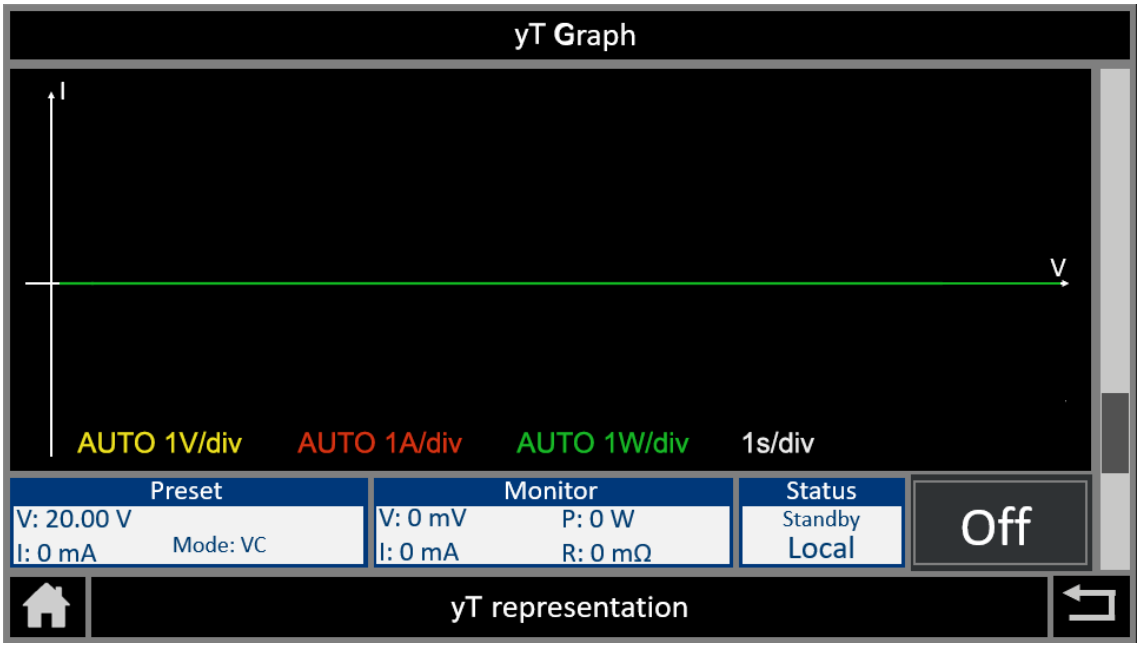

Figure 5.4 yT Graph

5.2 Configuration

The configuration submenu provides configuration for parameter limits, slew rates, and customizing display preferences, offering a comprehensive toolkit for optimizing the DC power supply's performance to suit varied needs.

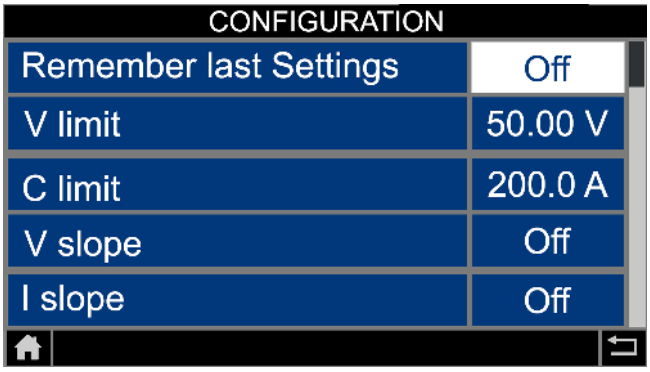

Page 1

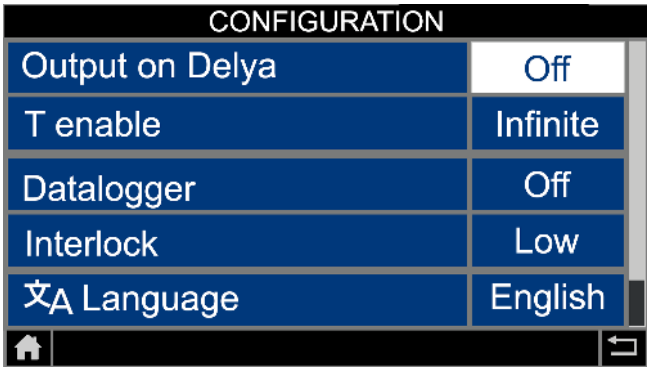

Page 2

Figure 5.5 Configuration Submenu

Remember settings Saves the last set settings to non-volatile memory.

U Limit Configures the upper voltage limit. This limits the maximum voltage value the user can set.

I Limit Configures the upper current limit. This limits the maximum current value the user can set.

V Rise Configures the voltage rise time of the output in V/s.

I rise Configures the current rise time of the output in A/s.

Switch-on delay Configures a channel on delay in seconds. Upon enabling the output the instrument will delay the output for the specified time.

T Enable Configures the output timer, defining the duration of the output's ON time.

Data logger Defines the sampling interval in seconds, ranging from OFF to 100. The recorded output values are saved on the USB stick inserted in the front.

Interlock Configures the level of the interlock (high or low active).

Language Sets the interface's language.

5.3 Protection

The protection submenu provides configuration for of the safety features to safeguard electronic components. This menu enabling users to configure limits and thresholds for optimal performance while preventing potential damage to connected devices.

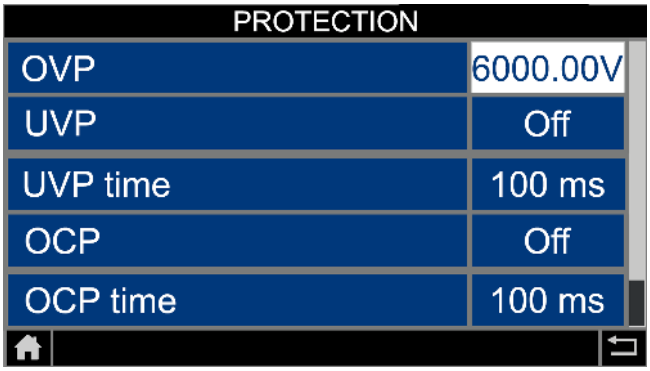

Page 1

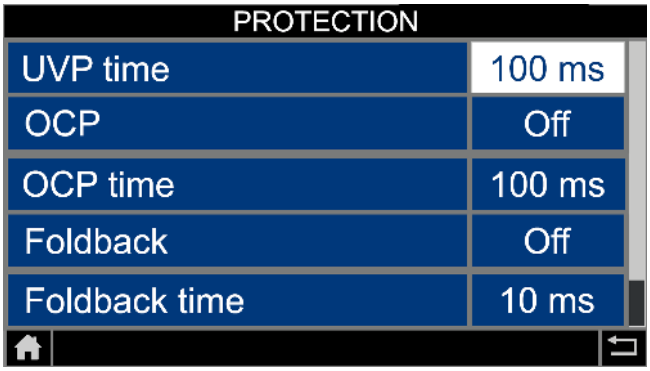

Page 2

Figure 5.6 Protection Submenu

OVP (Over Voltage Protection): Safeguards devices from excessive voltage levels. This protective mechanism detects and respond to voltage spikes or surges beyond the predetermined thresholds. The output is disabled when the threshold is reached preventing potential damage caused by excessively high voltage levels.

UVP (Under Voltage Protection): Detect and address situations where the voltage drops below a predefined threshold, which helps prevent damage to connected devices and ensures they operate within specified voltage ranges. The output is disabled when the threshold is reached preventing potential damage caused by excessively high voltage levels.

UVP Time Configures the response time of under voltage protection.

OCP (Over Current Protection): (Under Voltage Protection): Detects and mitigate instances of excessive current flow in a circuit, preventing damage to connected devices and components. By promptly interrupting the output, overcurrent protection safeguards against overheating, and helps maintain optimal performance. The output is disabled when the threshold is reached preventing potential damage caused by excessively high current levels.

OCP Time Configures the response time of over current protection.

Foldback Foldback protection respond to overload conditions by reducing the output current in a controlled manner, aiming to protect the connected devices and the power supply itself. During overload situations, foldback protection lowers the output current to a safe level, preventing excessive heat buildup and potential damage to components. This feature ensures the stability and longevity of the equipment by dynamically adjusting the current flow, thereby mitigating the risk of overheating and maintaining the integrity of the connected devices.

Foldback time Configures the response time of the foldback protection.

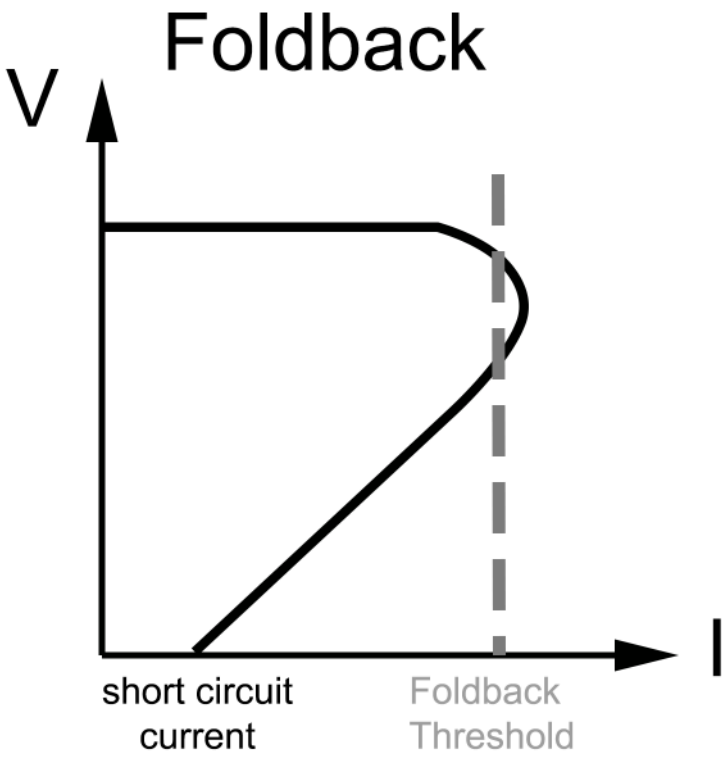

Figure 5.7 Foldback Protection

NOTICE

While over current protection and Foldback protection both safeguard against excessive current over current protection involves a quicker and more abrupt response to disable the output when the predefined threshold is reached. Foldback protection reduces the current in a gradual and controlled manner during overload, providing a smoother response to protect the system and connected devices.

5.4 Interfaces

The remote interface function enables remote control and communication between the power supply and external devices or systems. This feature allows users to operate and monitor the instrument from a distance, providing convenience, flexibility, and enhanced integration in various applications.

Through the remote interface function, users can establish a connection between the power supply and a controlling device, such as a computer, programmable logic controller (PLC), or other instrumentation systems. This enables remote configuration, control, and data acquisition, eliminating the need for direct physical interaction with the instrument.

The remote interface function supports various communication protocols such as Ethernet (raw socket), RS232, and an analog interface. This ensures compatibility and interoperability with a wide range of devices and systems, facilitating seamless integration into existing setups. Once connected, users can remotely adjust parameters, set test conditions, initiate tests, and monitor data. This allows for remote operation in applications where physical access to the instrument may be challenging, unsafe, or impractical.

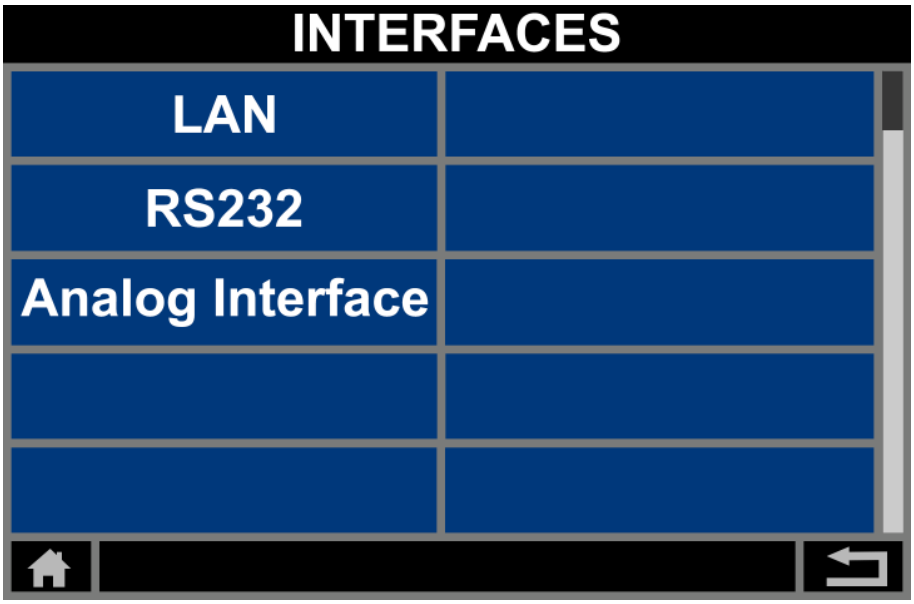

Figure 5.8 Interfaces Menu

5.4.1 LAN

The LAN (Local Area Network) interface provides a means for network connectivity and communication between the load and other devices or systems within a local network. This interface allows users to remotely control, monitor, and integrate the DC load into networked environments, providing convenience, flexibility, and enhanced capabilities.

In order to establish communication with the HPS through the network, locating the IP device is essential. Currently, the device acquires an IP address automatically during boot up. This is causes the device obtains a new IP address after each activation. Hence, it is recommended to assign a distinct, permanent IP address to each device to enhance operational efficiency.

The easiest way to check the IP address and assign is through the Lantronix device installer software. Click “search”. Now your network gets scanned for devices. You can see the device and its IP address. Click on the device and click Assign IP to assign an address.

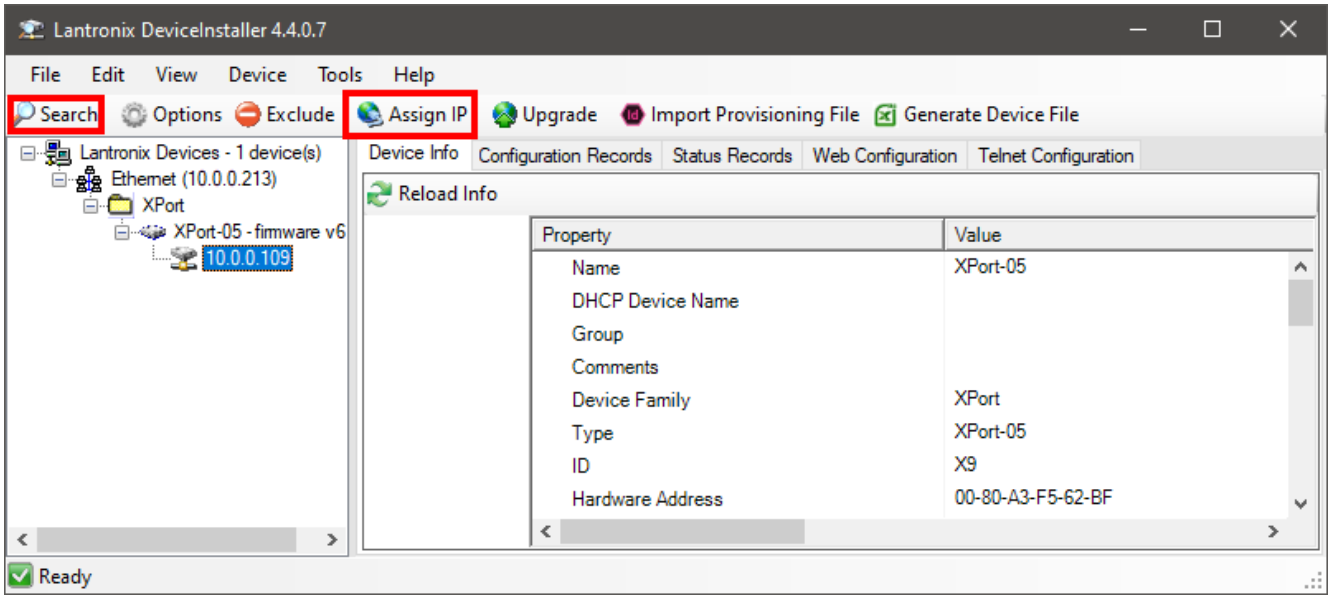

Figure 5.9 Lantronix Software

Another method to discover the IP is by entering "arp -a" in the Windows command prompt. Examine the MAC address of the device, which can be found on the device label. The IP displayed on the left side of the MAC address is the current IP address of the device.

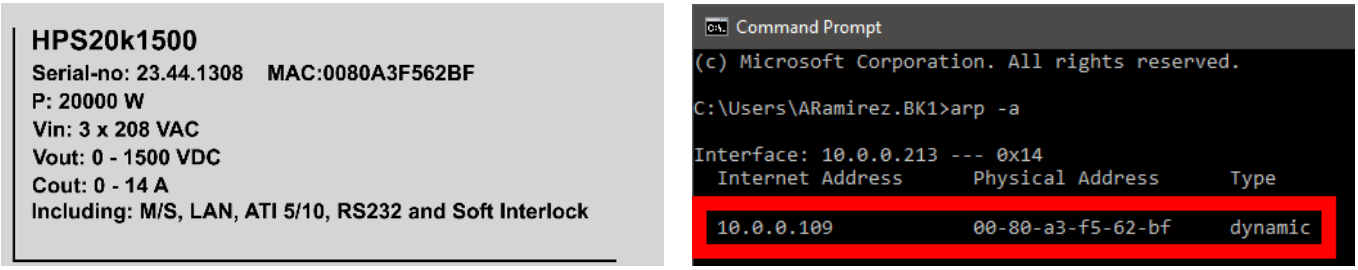

Label arp

Figure 5.10 Acquire IP Address

5.4.2 RS232

The serial interface of a power supply serves as a communication link, allowing seamless interaction between the power supply unit and external devices or control systems. This interface utilizes the serial protocol RS-232 , enabling users to remotely monitor, configure, and control the power supply's output parameters.

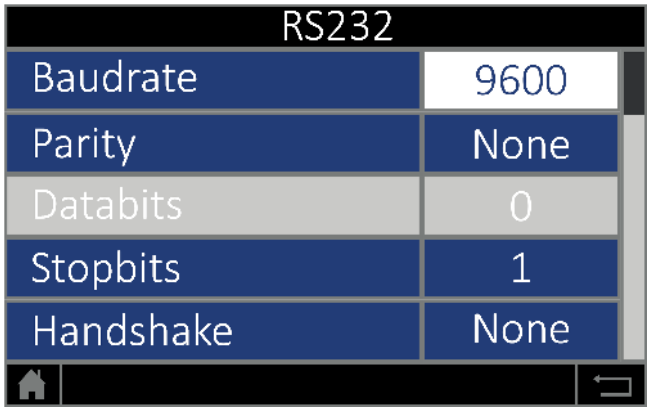

Page 1



Page 2

Figure 5.11 Protection Submenu

The following parameters are supported.

Baud rate: 1200, 2400, 4800, 9600, 14400, 19200, 38400, 57600, 62500, 115200

Parity: O = Odd = uneven parity
E = Even = even parity
N = None = no parity bit

Number of data bits: 7 or 8

Number of stop bits: 1 or 2

Handshake: H = Hardware
S = Software
N = None (no handshake)
The defined character for XON is 0 x 11 and for XOFF it is 0 x 13.

The RS232 interface connects through a 9-pin sub-D null modem cable.
Refer to **image 5.12** for the RS232 pinout. The RS-232 is labeled in the rear panel and it is a female DB-9 interface.

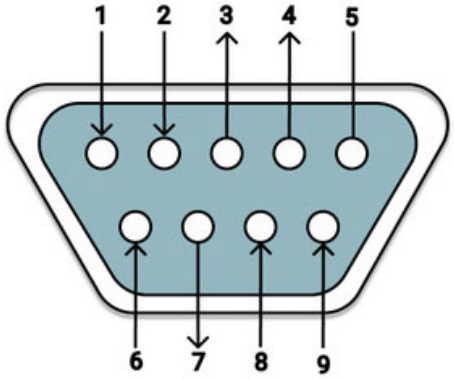

Figure 5.12 RS232 Pinout

Pin	Name	Function
1	N.C.	
2	TxD	Data line from unit to PC
3	RxD	Data line from PC to unit
4	N.C.	
5	GND	GND
6	N.C.	
7	CTS	Reception of the PC, signal direction from PC to unit (only required for active Hardware handshake)
8	RTS	Reception of the unit, signal direction from unit to PC (only required for active Hardware handshake)
9	N.C.	

Table 5.1 RS232 Pinout

NOTICE A null modem DB9 female to DB9 female serial cable is required for using the RS-232 interface. Do not use a straight DB9 cable.

5.4.3 Analog Interface

A DB25 analog interface connector is available in the rear panel for analog control. The analog interfacef (AI) serves as a bridge between digital systems and the HPS models, enabling communication and control through analog signals.

The analog voltage signals are converted into digital format for processing by digital systems. The interface incorporates an Analog-to-Digital Converter (ADC) for this purpose. The range of the external voltage source can be configured to either 0 to 10 VDC or 0 to 5 VDC.

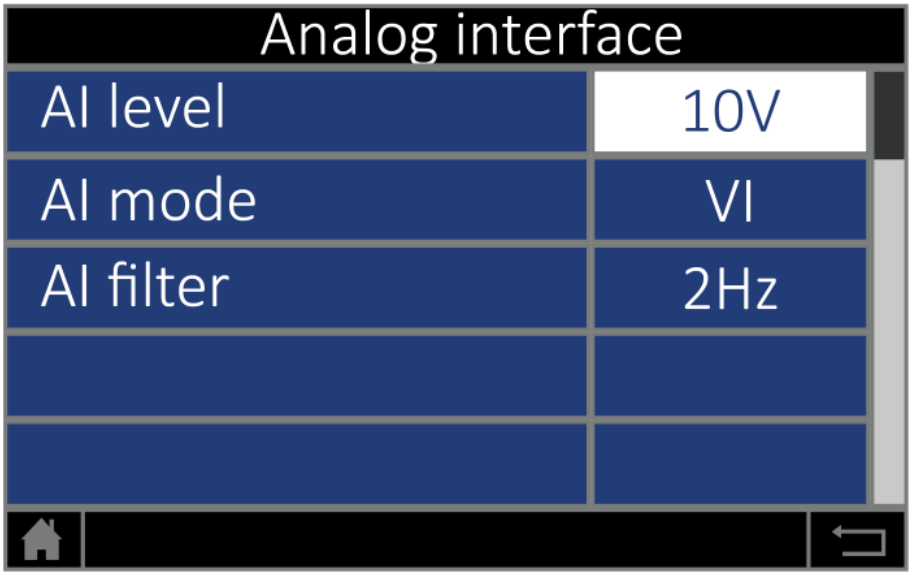

Figure 5.13 Analog Interface Menu

In the analog interface menu the external voltage level can be configured, as well as the operation mode of the analog interface and a filter.

NOTICE

When the analog interface is enabled, configuring the instruments from any other interface is not possible. The front panel becomes locked, and all other interfaces are disabled. To regain control through the front panel or enable other interfaces, the analog interface must be disabled.

The externals source value can be scaled up to the output level using the following equation:

$$OutputLevel = ExternalAnalogSource \times OutputFullScale \div AILevel$$

Output Level Level of the set parameter

External Analog Source Level of the external source provided at the set pin

Output Full Scale Maximum level of the output being configured

AI Level Set analog level in the Analog Menu

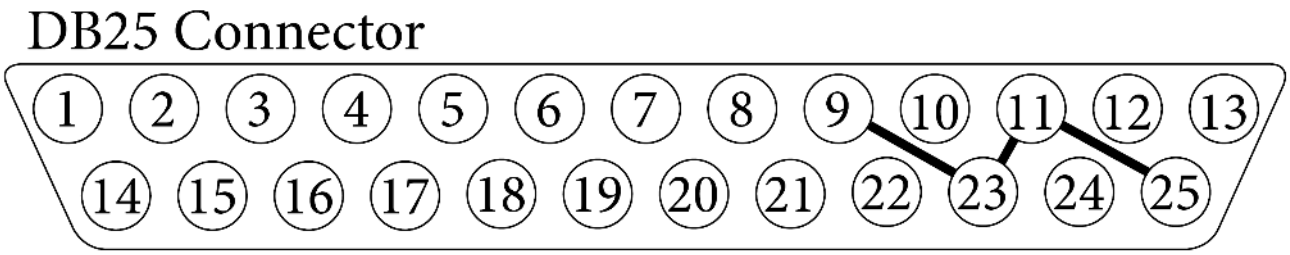

Figure 5.14 DB25 Connector

Pin	Dir	Name	Pin	Dir	Name
1	analog out	V_{mon}	14	analog in	V_{set}
2	analog out	I_{mon}	15	analog in	I_{set}
3	analog out	P_{mon}	16	analog in	In 2
4	analog out	OVP_{mon}	17	analog in	OVP_{set}
5	digital in	Soft-Interlock	18	analog in	In 4
6	-nc-	-	19	digital in	Ext. Control
7	digital out	CV	20	digital in	$Output_{set}$
8	analog out	V_{istmon}	21	analog out	I_{istmon}
9	gnd	GND	22	pwr	+5 V
10	digital out	$Output_{mon}$	23	gnd	GND
11	gnd	GND	24	digital out	Error
12	-nc-	-	25	gnd	GND
13	REF10	10 V-Vref			

Table 5.2 Analog Interface Pinout

NOTICE All digital outputs are OC outputs with a pull-up resistance after + 5 V. All analog inputs and outputs can be operated in 0-5 V or in 0-10 V mode.

5.4.3.1 Monitor Voltage Set Point V_{mon}

Pin 1 (V_{mon}) is an analog output which provides the function to monitor the voltage signal supplied to pin 14 (V_{set}). To use this function connect Pin 1 and one of the ground pins (i.e. Pin 9) to a digital voltage meter (DVM). **Figure 5.15** shows the setup using a DVM.

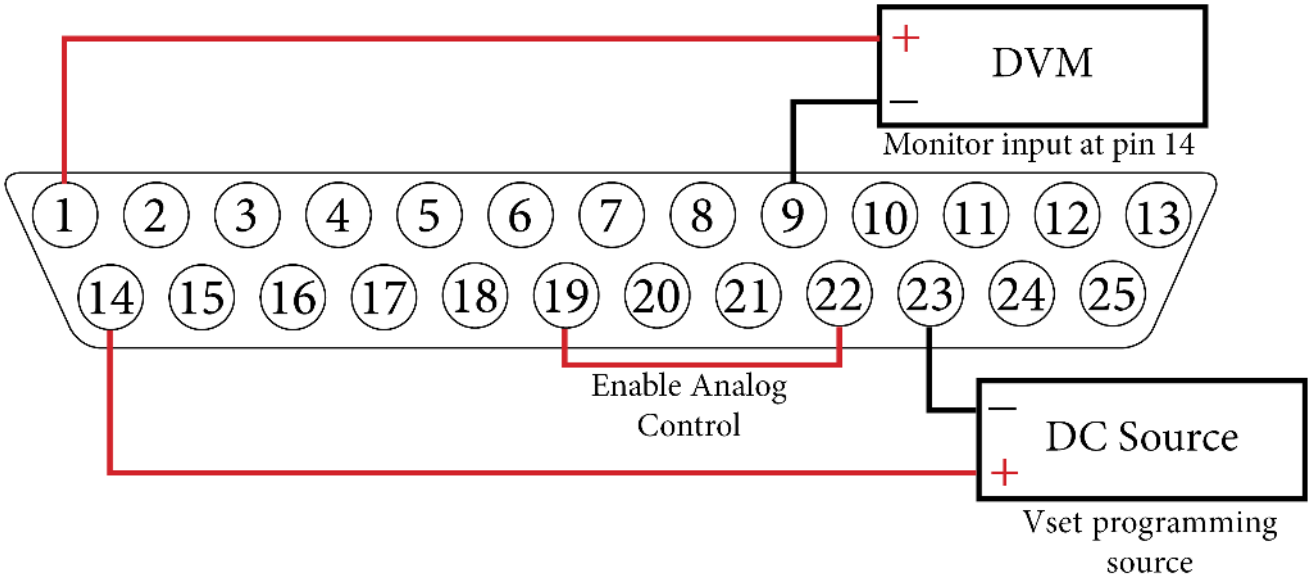

Figure 5.15 Vmon Setup

NOTICE The supply must be in Analog mode to use this function.

5.4.3.2 Monitor Current Set Point I_{mon}

Pin 2 (I_{mon}) is an analog output which provides the function to monitor the voltage signal supplied to pin 15 (I_{set}). To use this function connect Pin 2 and one of the ground pins (i.e. Pin 9) to a digital voltage meter (DVM). **Figure 5.16** shows the setup using a DVM.

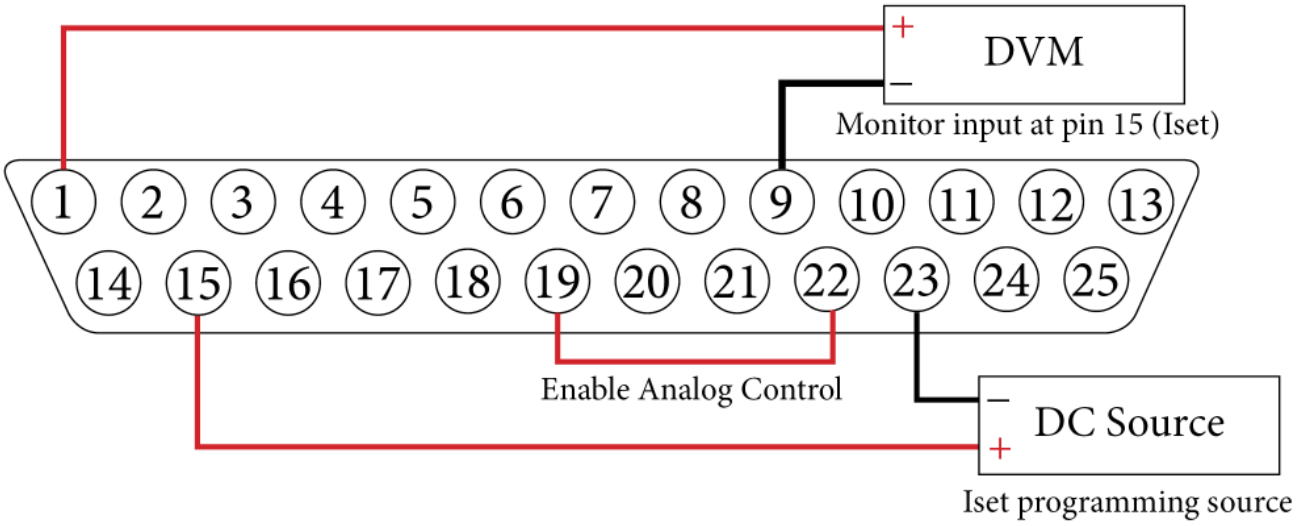

Figure 5.16 Imon Setup

NOTICE The supply must be in Analog mode to use this function.

5.4.3.3 Monitor Power Output P_{mon}

Pin 3 (P_{mon}) is an analog output which provides the function to monitor the power level at the output terminals. The power value is calculated by the controller from measurement values of output voltage and output current. To use this function connect Pin 3 and one of the ground pins (i.e. Pin 9) to a digital voltage meter (DVM). **Figure 5.16** shows the setup using a DVM.

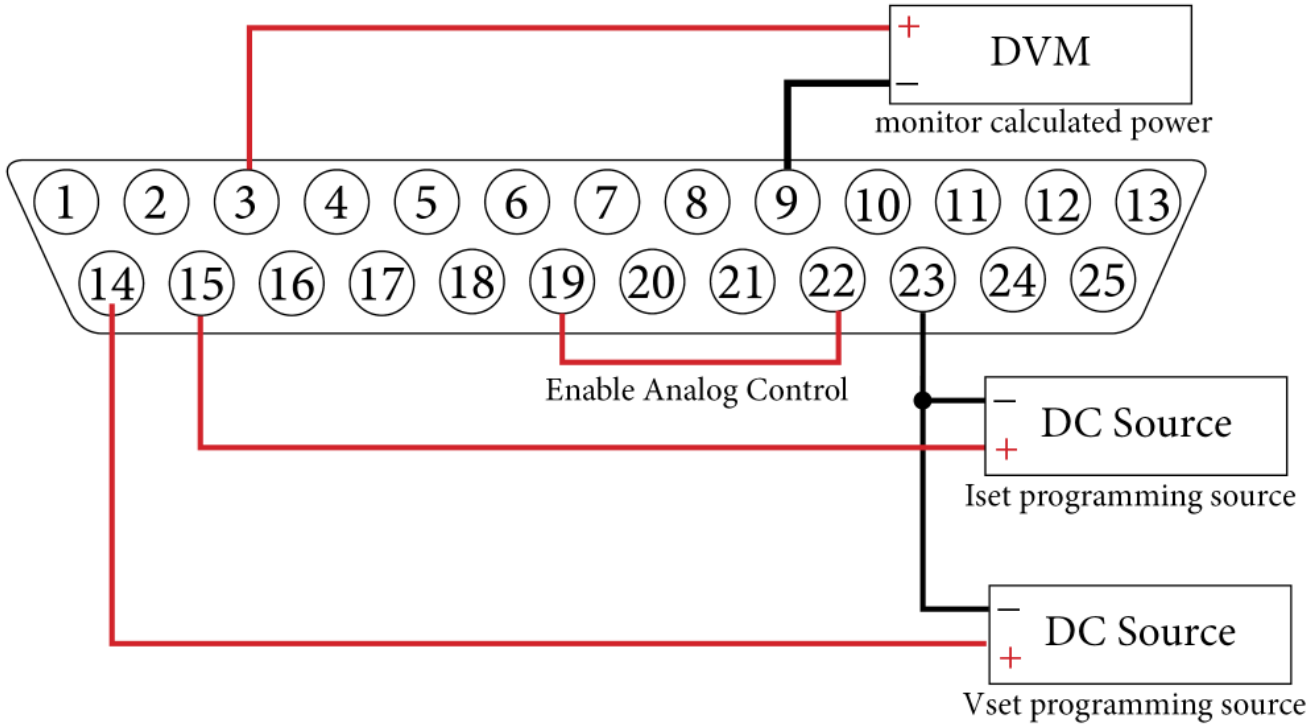

Figure 5.17 Pmon Setup

NOTICE The supply must be in Analog mode to use this function.

5.4.3.4 Monitor OVP Set Point OVP_{mon}

Pin 4 (OVP_{mon}) is an analog output which provides the function to monitor the voltage signal supplied to pin 17 (OVP_{set}). To use this function connect Pin 4 and one of the ground pins (i.e. Pin 9) to a digital voltage meter (DVM). **Figure 5.18** shows the setup using a DVM.

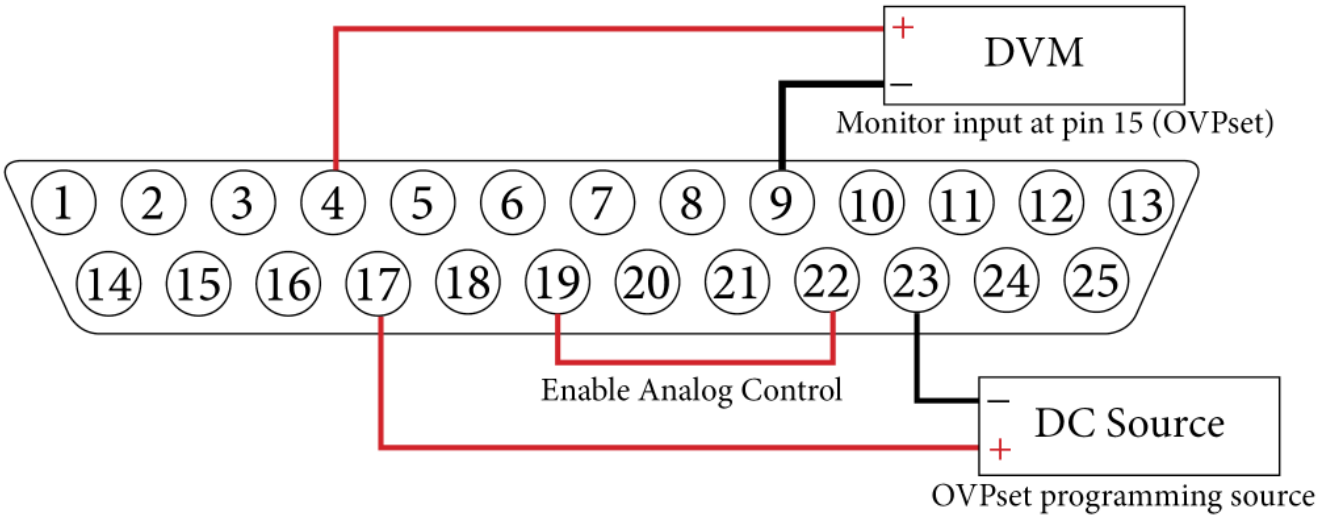

Figure 5.18 OVPmon Setup

NOTICE The supply must be in Analog mode to use this function.

5.4.3.5 Soft-Interlock

The Interlock pin (Pin 5)deactivates the unit immediately, when the connection between interlock input (Pin 5) and +5 V voltage is opened. In this case, the output of the unit cannot be activated, neither by interface nor by front panel. The Soft-Interlock does not correspond to the machinery directives. If the Soft-Interlock is triggered, the unit switches into Interlock-Mode.

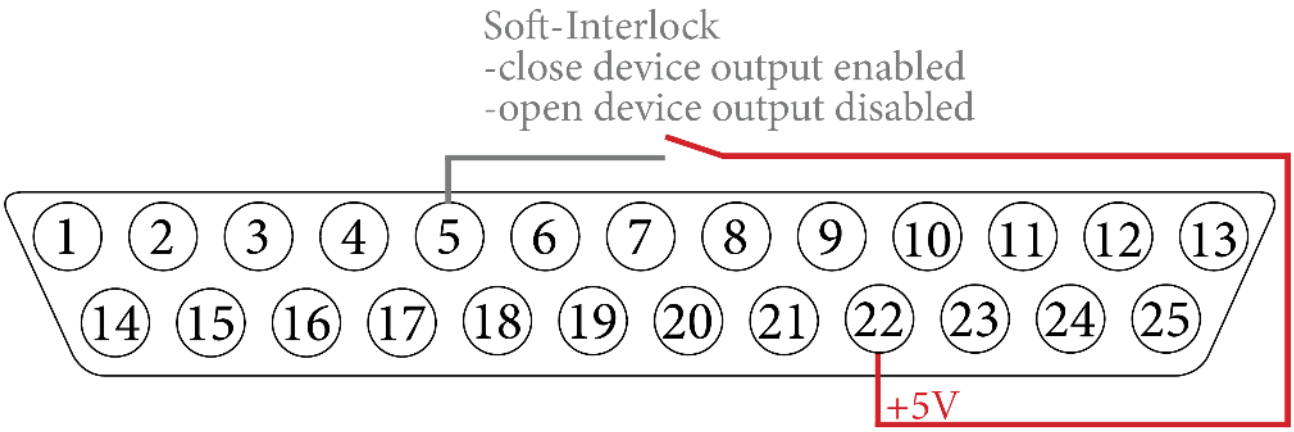

Figure 5.19 Soft-Interlock

NOTICE The supply must be in Analog mode to use this function.

5.4.3.6 Constant Voltage Mode (CV)

Pin 7 (CV) is a digital output which returns the constant voltage mode status.

Digital outputs implement negative logic. In negative logic, a logical "0" or "false" is represented by a higher voltage level (1.2 V.), and a logical "1" or "true" is represented by a lower voltage level (< 0.6 V).

5.4.3.7 Monitor Output Voltage (V_{istmon})

Pin 8 (V_{istmon}) is an analog output which provides the function to monitor output's voltage. To use this function connect Pin 8 and one of the ground pins (i.e. Pin 9) to a digital voltage meter (DVM). **Figure 5.20** shows the setup using a DVM.

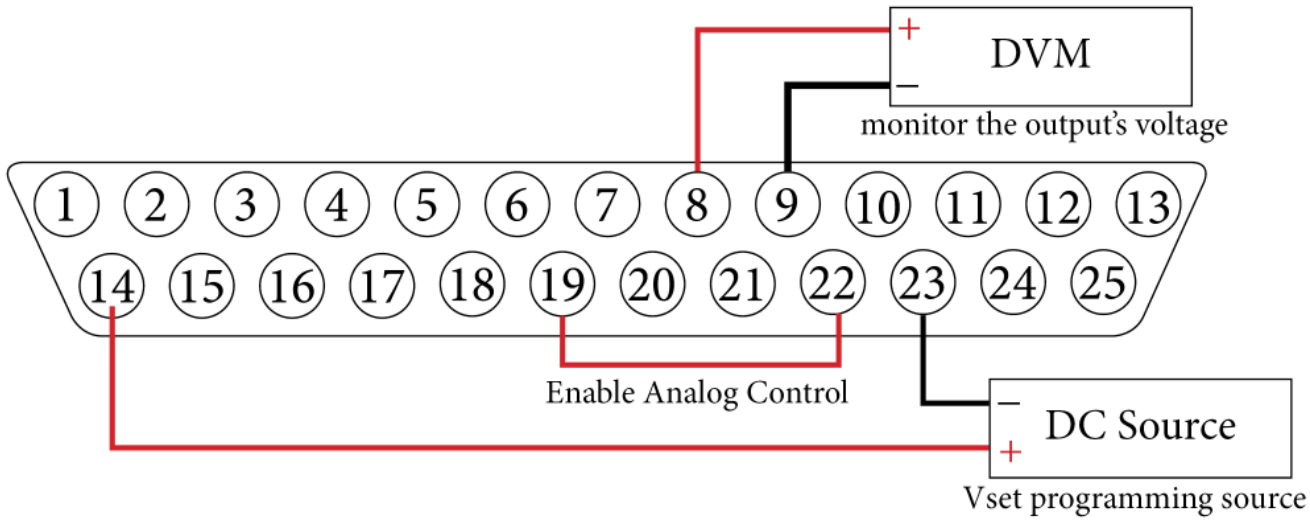

Figure 5.20 V_{istmon} Setup

NOTICE The supply must be in Analog mode to use this function.

5.4.3.8 Block $Output_{mon}$

Pin 10 (Block $Output_{mon}$) is a digital output which returns the block output's status.

Digital outputs implement negative logic. In negative logic, a logical "0" or "false" is represented by a higher voltage level (1.2 V.), and a logical "1" or "true" is represented by a lower voltage level (< 0.6 V).

NOTICE If Pin 10 returns a logical 0 the output is enabled since block output is disabled. Likewise, if it returns a logical 1 the output is disabled since block output is enabled.

5.4.3.9 10 V-Vref

Pin 13 (10 V-Vref) provides a 10 V reference signal. This signal can be used to provide an analog signal to other set pins such as $Output_{set}$, or when combined with a potentiometer it can supply the required voltage signal to V_{set}, I_{set}, and OVP_{set}.

Figure 5.21 illustrates how the potentiometers can be used to create a voltage divider and provide the voltage signal to the set pins.

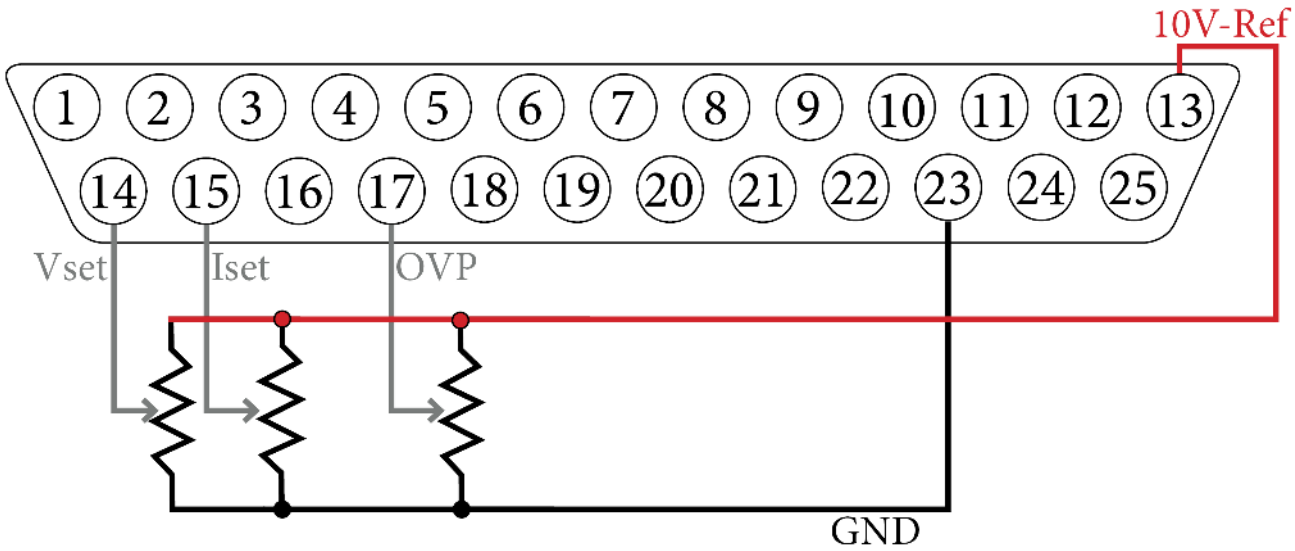

Figure 5.21 10 V Reference Potentiometer Setup

NOTICE The setup shown in the figure above would require AI level to be configured to 10V.

5.4.3.10 Voltage Set Point V_{set}

Pin 14 (V_{set}) is an analog input used to set the output's voltage level. To program the voltage level connect Pin 14 and one of the ground pins (i.e. Pin 23) to an external DC source. **Figure 5.15** shows the required setup.

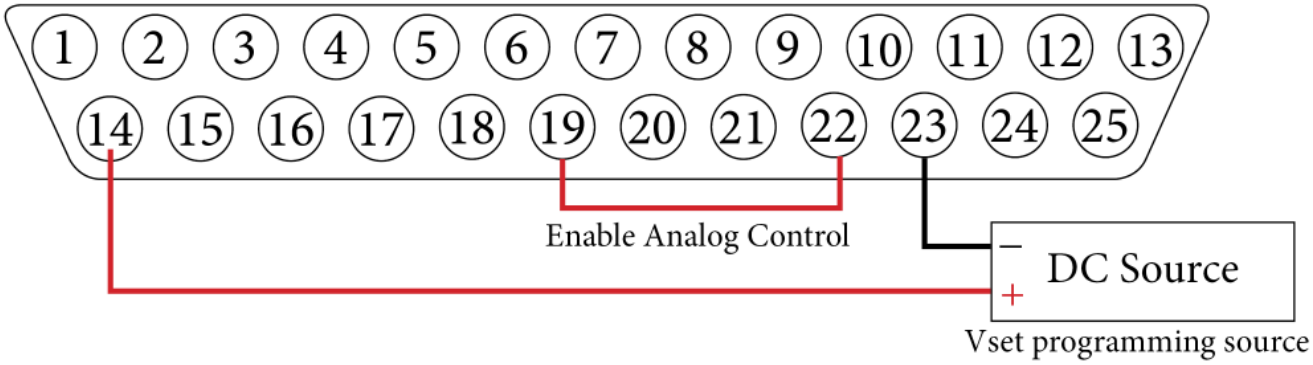

Figure 5.22 Vset Setup

NOTICE The supply must be in Analog mode to use this function.

5.4.3.11 Current Set Point V_{set}

Pin 15 (I_{set}) is an analog input used to set the output's current level. To program the current level connect Pin 15 and one of the ground pins (i.e. Pin 23) to an external DC source. **Figure 5.23** shows the required setup.

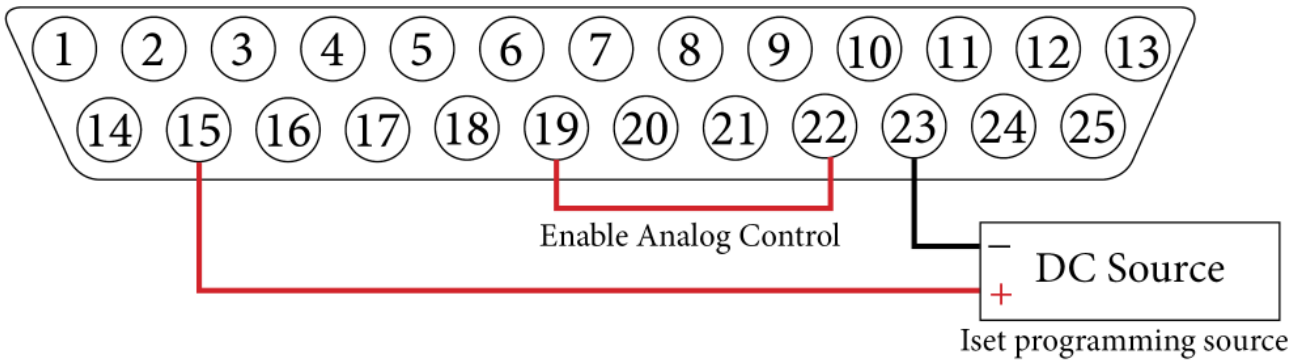

Figure 5.23 Iset Setup

NOTICE The supply must be in Analog mode to use this function.

5.4.3.12 OVP Set Point OVP_{set}

Pin 17 (OVP_{set}) is an analog input used to set the instrument's over voltage protection level. To program the current level connect Pin 17 and one of the ground pins (i.e. Pin 23) to an external DC source. **Figure 5.24** shows the required setup.

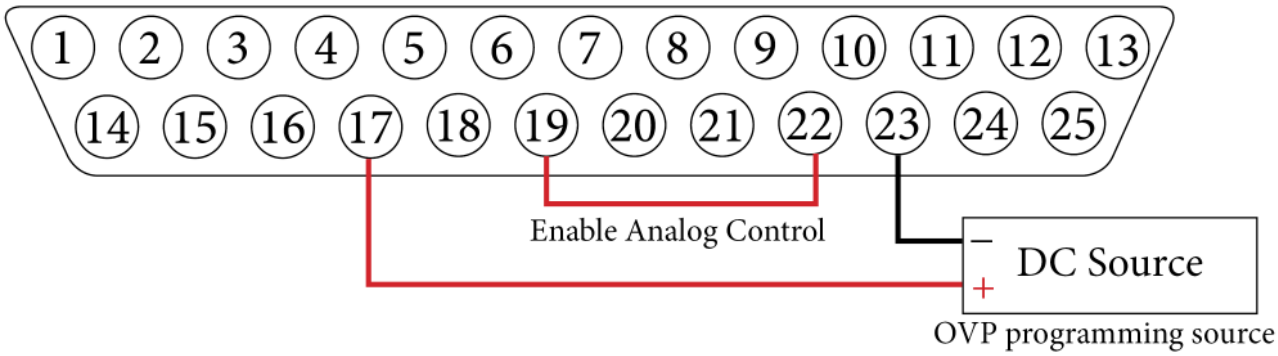

Figure 5.24 OVPset Setup

NOTICE The supply must be in Analog mode to use this function.

5.4.3.13 External Control

Pin 19 (Ext. Control) is a digital input used to enable/disable the analog interface (AI). The AI interface is activated by applying a true signal of 5 V - 10 V.

Enabling the AI disables front panel operation. Operation mode is marked as **AI** on the display, but the digital interface will take priority over the AI interface. The settings from AI interface have no effect if the device is toggled to **Remote**.

Shorting pin 19 and 22 or pin 19 and 13 will enable AI.

5.4.3.14 Block $Output_{set}$

Pin 20 (Block $Output_{mon}$) is a digital input used to enable/disable the block output function. The block output function is activated by applying a true signal of 5 V - 10 V.

The output signal is enabled, when pin 20 is opened. Shorting pin 20 and 22 or pin 20 and 13 will disable the output signal.

5.4.3.15 Monitor Output Current (I_{istmon})

Pin 21 (I_{istmon}) is an analog output which provides the function to monitor output's current. To use this function connect Pin 21 and one of the ground pins (i.e. Pin 23) to a digital voltage meter (DVM). **Figure 5.25** shows the setup using a DVM.

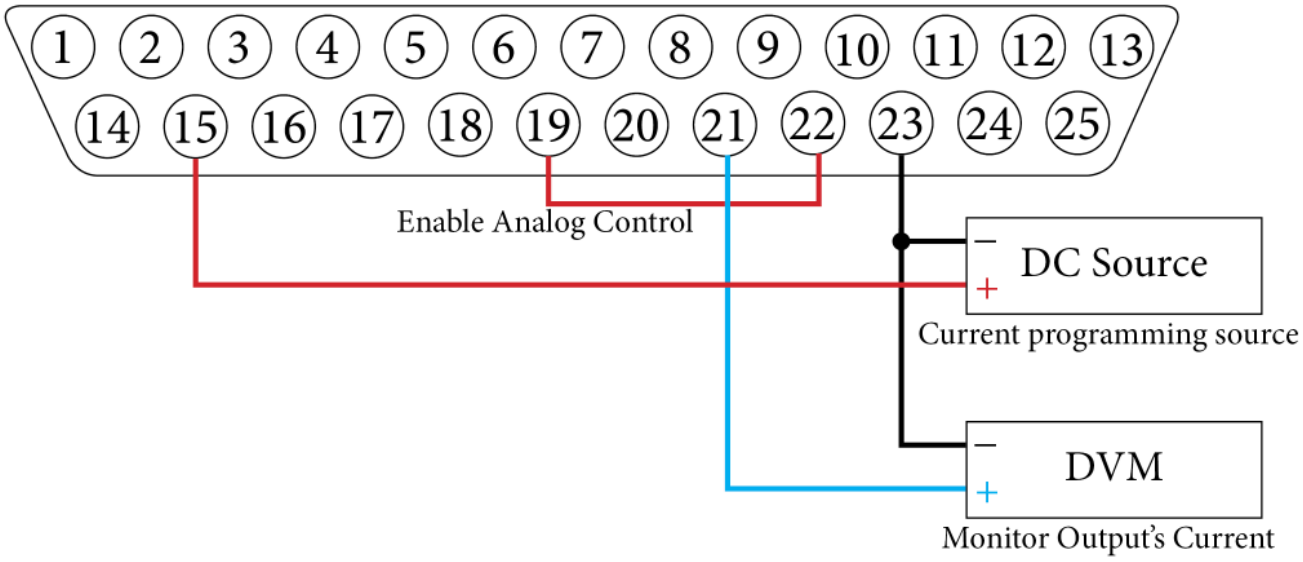

Figure 5.25 I_{istmon} Setup

NOTICE The supply must be in Analog mode to use this function.

5.4.3.16 5 V Source

Pin 22 (+5 V) provides a 5V signal. This signal can be used to provide a digital signal to other digital inputs.

Figure 5.26 demonstrates how pin 22 can be used to provide a true digital signal to other digital input pins.

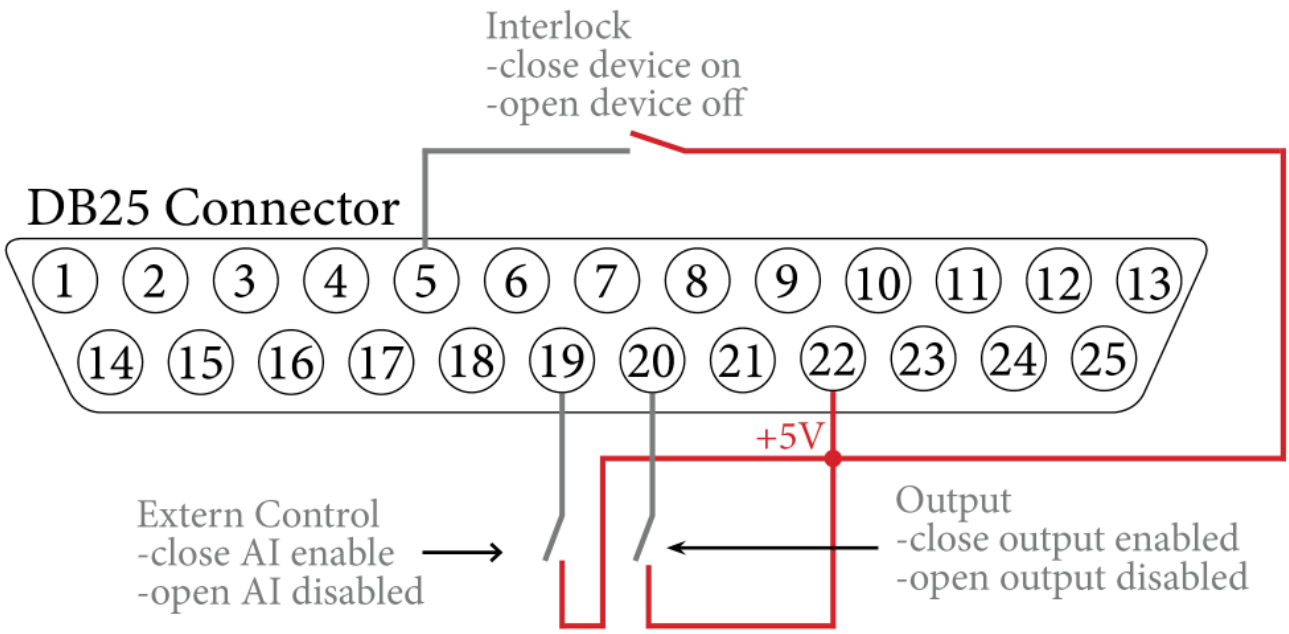

Figure 5.26 5 V Setup

5.4.3.17 Error

Pin 24 (Error) is a digital output which returns a digital true when the unit has been shut down by OVP.

NOTICE To reset this error, the standby mode must be activated.

5.5 Controller List

The controller-list submenu provides configuration of the digital controllers. The software contains three digital PID controllers, each designated for UIR, UIP, and PVsim modes. Independent controllers allow for adaptive values to the respective application. The values to be set range from 0 to 9.9999. The higher the value set, the greater the range of influence of the respective controller.

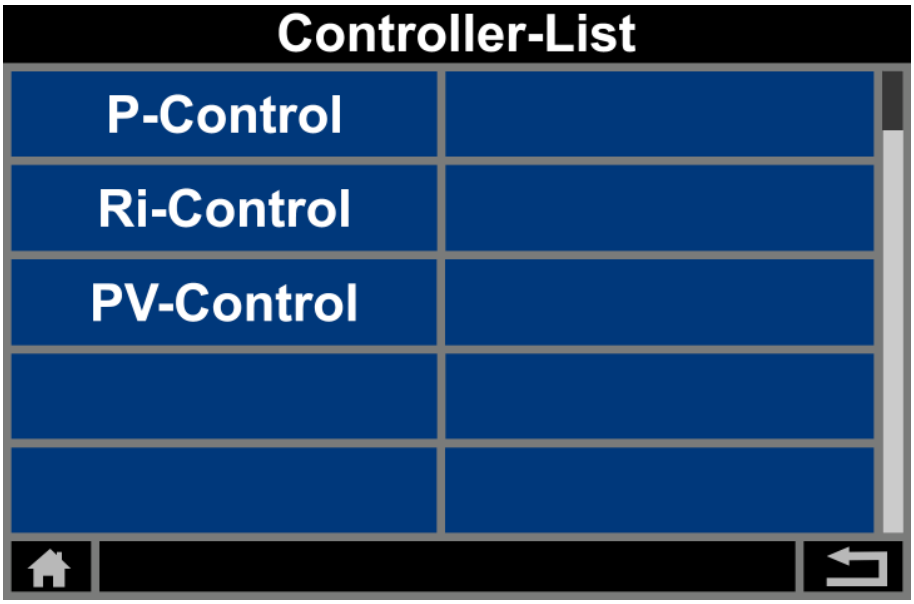

Figure 5.27 Controller List Menu

WARNING **Improper adjustment of the controller can result in oscillations that have the potential to damage connected devices.**

5.5.1 PV_{Sim} Mode Controller

The current set point is derived from the output voltage using a predefined table. This set point represents the input signal of the PID controller, obtained by subtracting it from the actual value. The PID controller then transmits this current set point to the power supply. The current set point is limited to the short circuit current. The voltage set point for the power supply remains consistently set to the open circuit voltage from the table. In PVsim mode, current is regulated while the voltage is held constant.

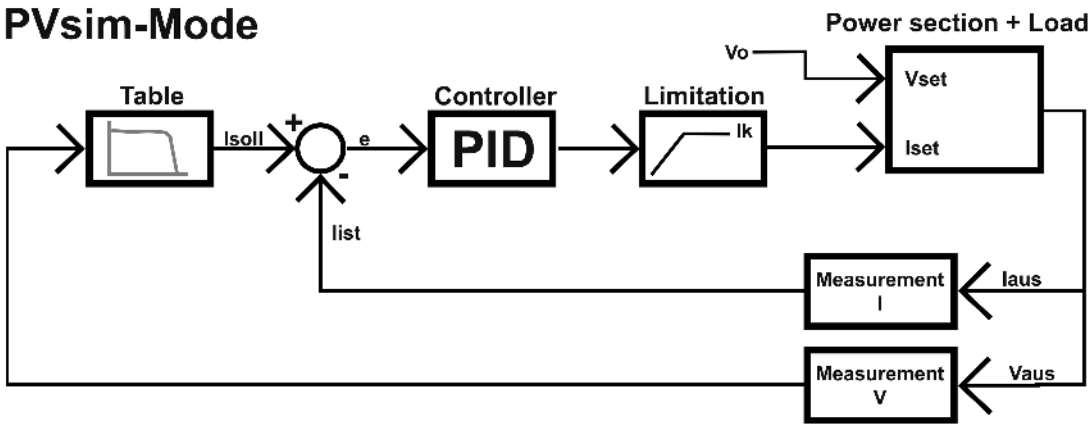

Figure 5.28 PV_{Sim} Control Structure

5.5.2 VIP Mode Controller

The output voltage is multiplied with the output current. The result is subtracted from the power set point. This signal is the input signal of the PID controller, which releases the current set point for the power supply. The current set point is limited to the current set point, as a maximum. The voltage set point of the power supply is permanently set to the voltage set point. In VIP mode the current is regulated, while the voltage is fixed.

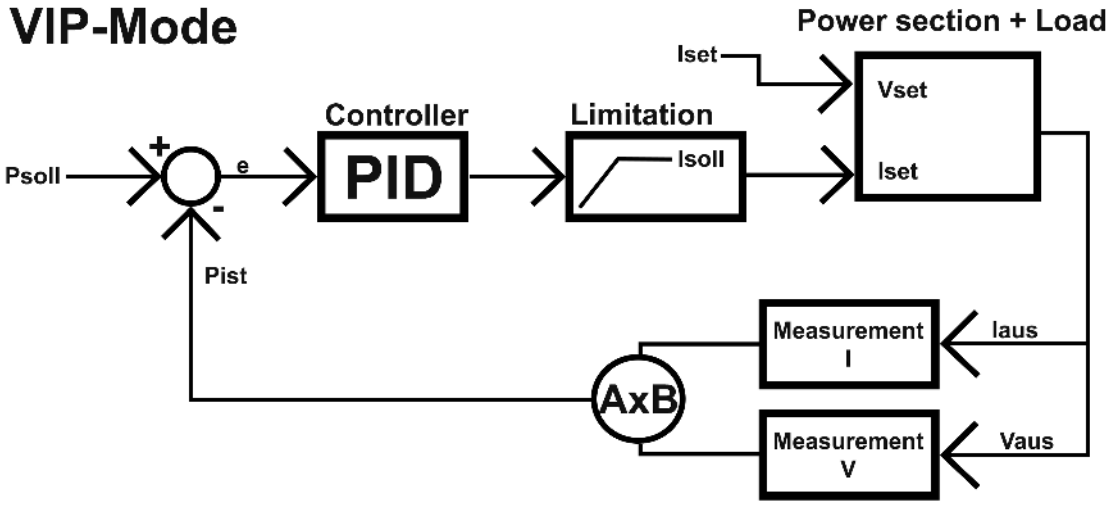

Figure 5.29 VIP Control Structure

5.5.3 VIR Mode Controller

The measured output current is multiplied with the adjusted internal resistance. The result is subtracted from the adjusted set point and is then the set point for the voltage controller:

$$V_{soll} = V_{set} - I_a R_i$$

The output signal is limited to the voltage set point. The current set point of the power supply is permanently set to Isoll. In UIR mode the voltage is regulated while the current is fixed.

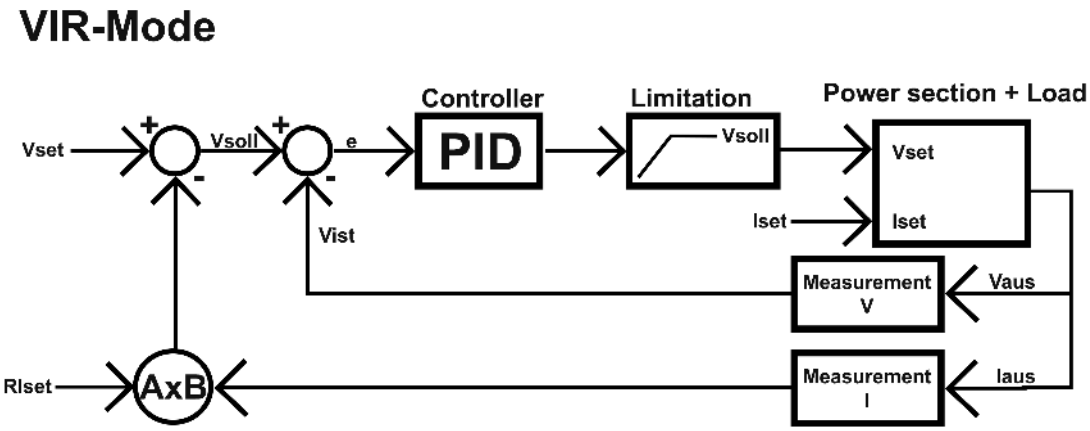

Figure 5.30 VIR Control Structure

5.5.4 Controller Equation

The common differential equation of a PID controller is as follows:

$$y = k_p \times (e + \frac{1}{T_n}\int e(t)dt + T_v\frac{de}{dt})$$

E Controller deviation
K_p Proportional coefficient
T_n Reset time
T_v Derivative time

Since the digital controller is a discrete-time system, the integral is replaced by a summation and the differential by a difference:

$$y = k_p \times (e_i + \frac{T_s}{T_n}\sum_{m=-\infty}^{m=1} e_m + \frac{T_v}{T_s}(e_i - e_{i-1}))$$

T_s Sampling Time

The following equation puts the controller into practice within the instrument:

$$y = 0.1 \times P \times e_i + 0.001 \times I \times \sum_{m=-\infty}^{m=1} e_m + 0.1 \times D \times (e_i - e_{i-1})$$

The parameters P, I, and D are calculated as follows:

$$P = 10 \times K_p \qquad I = \frac{1000 \times K_p \times T_s}{T_n} \qquad D = \frac{10 \times K_p \times T_v}{T_n}$$

5.6 Master/Slave

The master-slave function in a power supply system refers to a hierarchical control mechanism where one power supply unit, known as the master, takes the lead in regulating and setting key parameters. The slave units, connected in synchronization with the master, mirror and follow the master's settings. This configuration enables precise coordination and uniformity in the output across multiple power supply units. The coordination allows for parallel and series operation of power supplies, ensuring stability, efficiency, and synchronized performance of the entire system.

CAUTION **Master/Slave mode provides up to 160 kW with 8 units connected in parallel.**

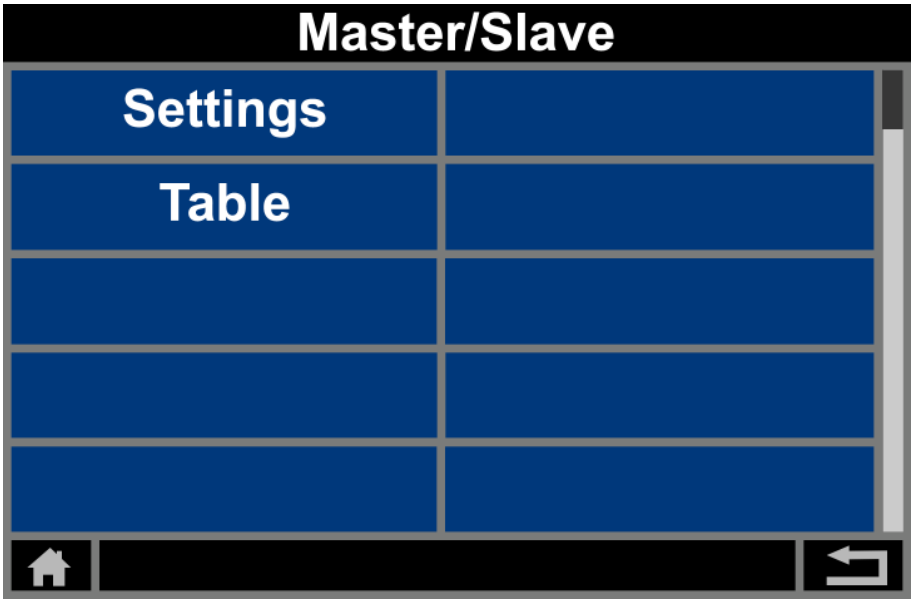

Figure 5.31 Master/Slave Menu

The Master/Slave settings submenu allows for configuration of the Master/Slave mode. The Master/Slave Table submenu displays the measured values (voltage, current, power) of each instrument connected as well as the sum of all channels.

5.6.1 Off

Master/Slave mode is disabled. No active master/slave mode, regardless of whether units are connected or not.

5.6.2 Parallel

Master/Slave mode is configured for parallel mode.
The control assumes that outputs are connected in parallel.

- Set points are respectively converted.
- The displays will show the total current as measure point.

NOTICE Current distribution between the individual units is not necessarily symmetrical. Thus, the total current will be limited to the adjusted value.

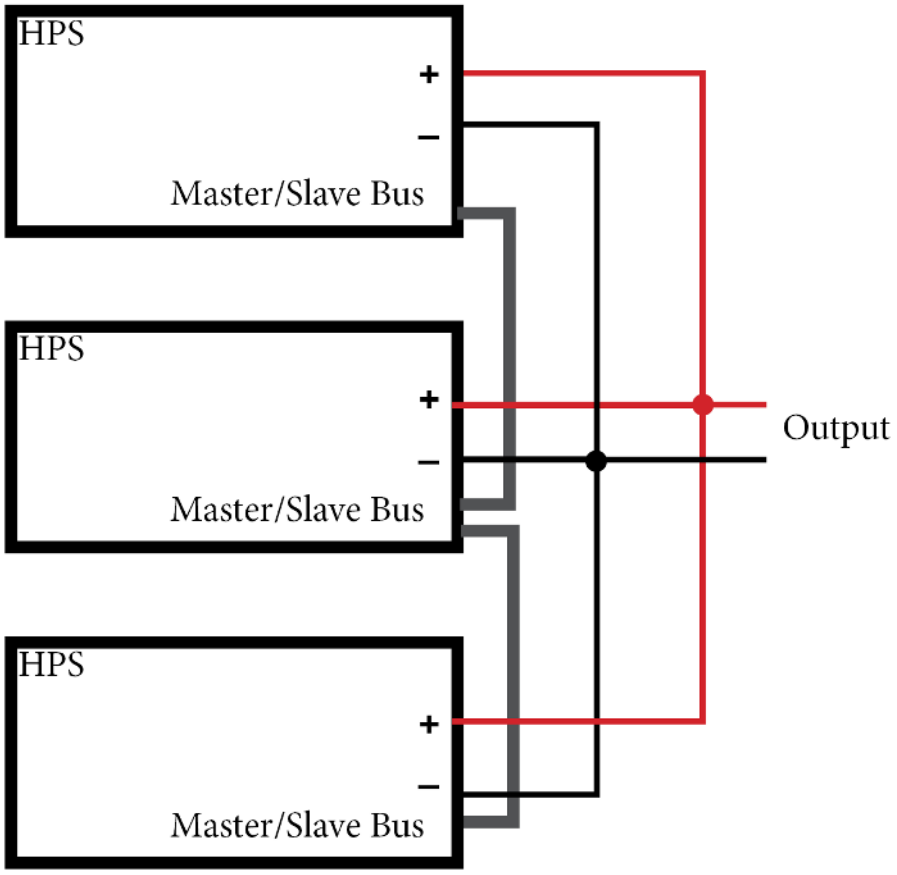

Figure 5.32 Parallel Mode Setup

5.6.3 Series

Master/Slave mode is configured for seires mode.
The control assumes that outputs are connected in series.

- Set points are respectively converted.
- The displays will show the total voltage as measure point.

NOTICE Voltage distribution between the individual units is not necessarily symmetrical. Thus, the total voltage will be limited to the adjusted value.

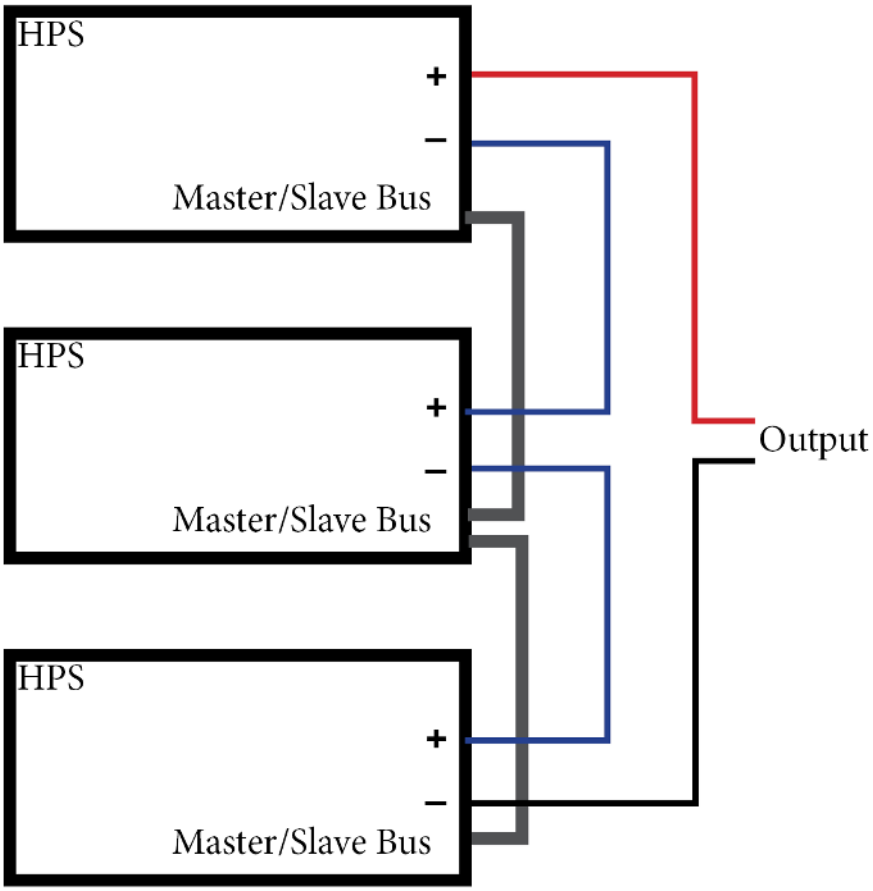

Figure 5.33 Series Mode Setup

5.6.4 Independent

Master/Slave mode is configured for independent mode.
The control assumes that the outputs are independent. Set points are exchanged via bus only. The display equals the standard display.

Independent mode provides precise and synchronized control of multiple instruments. This allows the power supply to maintain a constant voltage or current relationship between different instruments, ensuring consistent and coordinated performance. Whether adjusting voltage levels or current outputs, all outputs respond simultaneously, delivering reliable and harmonized power to various connected devices. This feature is particularly beneficial when powering components that demand synchronized electrical parameters for optimal functionality.

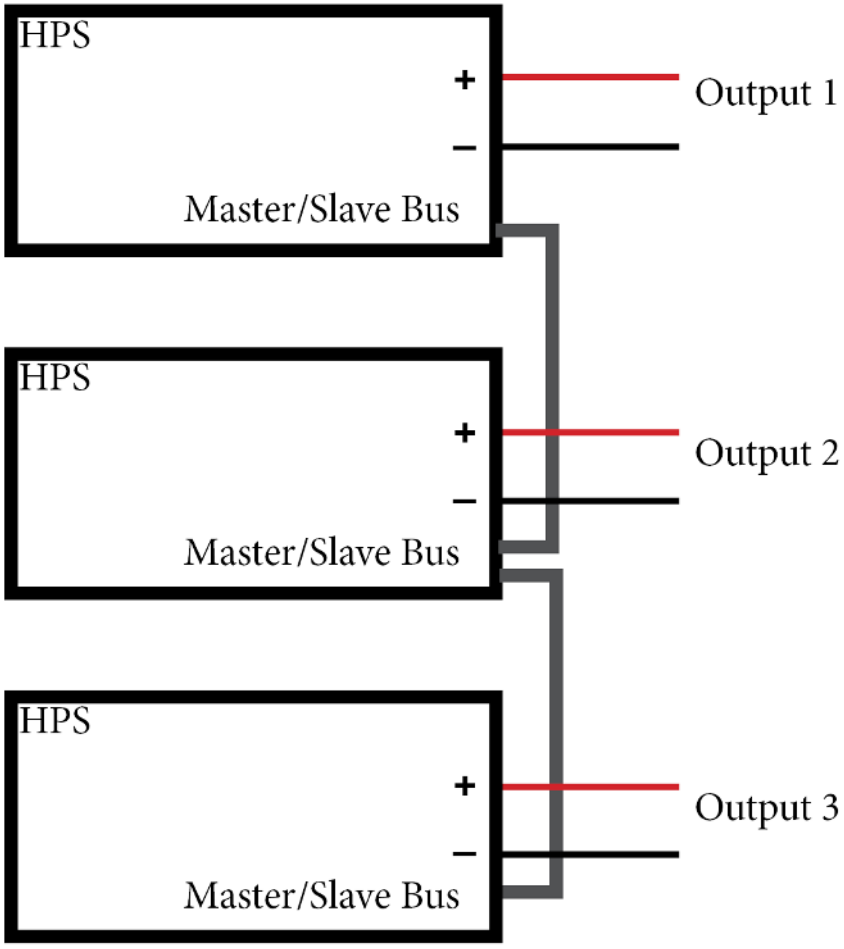

Figure 5.34 Series Mode Setup

5.7 Info

The Info menu provides hardware details about the unit in this section. The provided information encompasses:

- Device model
- Serial number
- Maximum output voltage/current/power
- Built-in interfaces

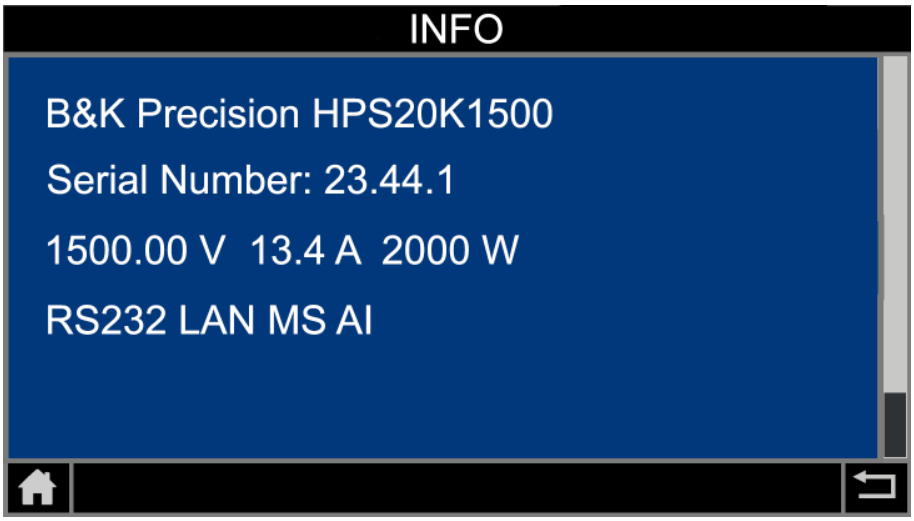

Figure 5.35 INFO Submenu

5.8 Factory Settings

Within the factory settings menu, you can access software details and choose to restore all parameters to their original factory defaults.

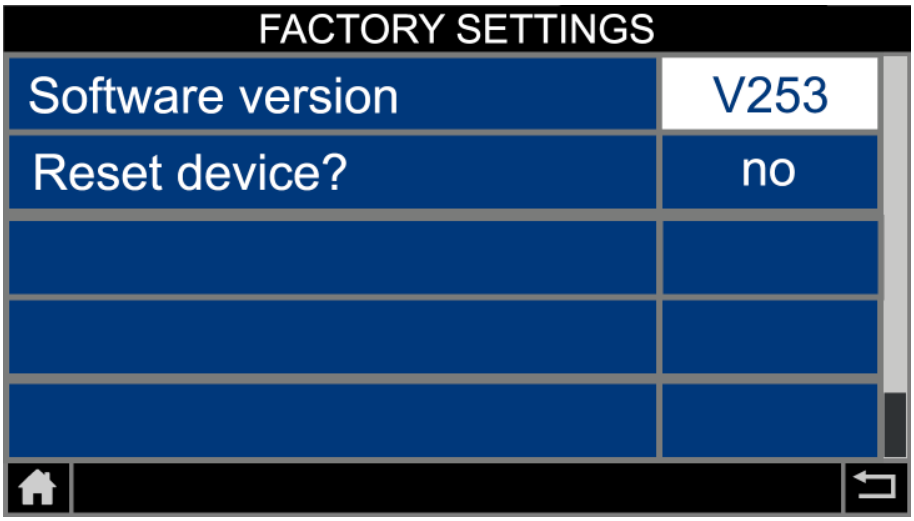

Figure 5.36 Factory Settings Submenu

Data Log Function

The HPS series is capable of logging voltage and current measurements to an external USB drive. All measurement values are separated by tabulators, in a .txt file. To activate the data log function the USB drive must be connected, and Data Logger must be enabled.

To enable Data Logger navigate to the **Configuration** submenu and specify the sampling rate of the Data Logger.

NOTICE Sampling rate can be configured between 1 to 100 seconds.

WARNING **The USB drive must only be inserted and removed while the output is disabled.**

The instrument will create a .txt file named "LOGGER.TXT" in the USB root directory. The operation mode, along with the output state, voltage, and current measurements will be logged as shown in **Figure 6.1**

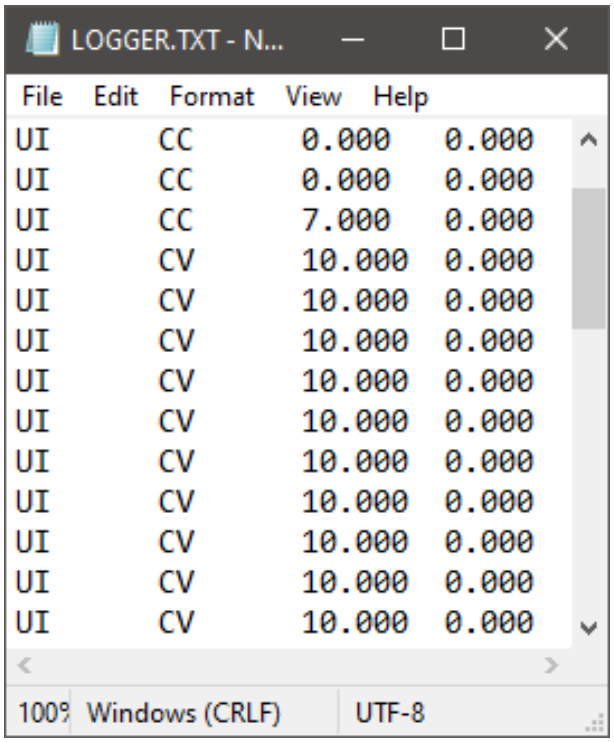

Figure 6.1 LOGGER.TXT

Script Mode

Script mode allows for programming of sequences, which can be loaded from a USB drive. A script is essentially a text file containing a sequence of commands. Alternatively, the script memory can be programmed via the digital interface using the command SCR. For detailed guidance on utilizing this command, please refer to the "HPS Programming Manual" .

NOTICE The device has the capability to process up to 1000 commands.

7.1 Load/Execute a Script

The script must be saved in the USB drive's root directory in the .scr format. The file can be edited in as a .txt file but in order to load the script to the instrument the file must be loaded as a .scr file.

To load a script file the instrument must be in SCRIPT mode. Upon selecting script mode a window will appear in the center of the display listing all available .scr files. Search for the appropriate script then, press the Vset rotary knob to load the selected file.

NOTICE An error message will display if the file cannot be read correctly or if the setup is invalid (e.g., IA 40 in a 10 A unit).

To return to the file selection menu, press the Vset or Iset rotary knob. Once the script has been loaded, it can be initiated by pressing the On / Off button. Pressing the On / Off button while the script is running will terminate the sequence and disable the output.

NOTICE The last five commands of the script are shown in the **Preset** field, with the current command displayed at the top.

7.2 Script Commands

The case sensitivity of commands is irrelevant; therefore, the following commands yield the same results: PMAX 100, Pmax 100, pMaX 100. Delimiters must be placed between two commands or between a command and its parameter. Valid delimiters include: blank space, tabulator, LineFeed (<LF>), Carriage Return (<CR>), and equal sign (=).

Numerical values must be written as basic units and should not be followed by characters. Valid delimiters for decimal places are: period (.) and comma (,). No characters should be appended directly to numerical values. For example: The command UAC 12.114V is invalid because it is followed by a character.

All commands may be written consecutively but must be separated by blank spaces. For example: U 10 I 1 UIP LOOP RUN. However, due to its unclear syntax, this style is not recommended.

Character	Description
; or #	Entering commented text.
DELAY<t>, DELAYS<t>	Delays execution of the script for duration of time t.
I<I in ampere>	Set point output current.
IMPP<I in ampere>	MPP current in ampere for PV simulation.
LOOP, LOOPCNT	Define the loop location of the script as well as the loop count.
PMAX	Maximum output for UIP mode.
PV	Activate PVsim mode.
RI	Set point internal resistance in ohm for UIR mode.
RUN	Enable output.
STANDBY	Disable output.
U	Set point output voltage in V.
UI	Activate UI mode.
UIP	Activate UIP mode.
UIR	Activate UIR mode.
UMPP	Set point MPP voltage (for PV simulation)
USER	Generates set points for current and voltage using the internal table.
WAIT	Waits for user action.
WAVE, WAVELIN	Characteristic programming.

Table 7.1 Controller Parameters

7.3 Script Example

```
# This example activates the output for 10s, then deactivates it for 2s
# and starts from the beginning. This will continue until the user
# interrupts the process by pushing the On / Off button.

UI # UI mode
U 10 # Output voltage 10 V
I 1 # Output current 1 A
LOOP # initiate infinite loop
RUN # Activate output
DELAYS 10 # Wait 10s
STANDBY # Deactivate output
DELAYS 2 # Wait 2s
```

```
# This example activates the output for 10s, then deactivates it for 2s
# and starts from the beginning. This will repeat 20 times.

UI # UI mode
U 10 # Output voltage 10 V
I 1 # Output current 1 A
LOOPCNT 20 # initiate 20 repetitions
RUN # Activate output
DELAYS 10 # Wait 10s
STANDBY # Deactivate output
DELAYS 2 # Wait 2s
```

Service Information

Warranty Service: Please go to the support and service section on our website at bkprecision.com to obtain an RMA #. Return the product in the original packaging with proof of purchase to the address below. Clearly state on the RMA the performance problem and return any leads, probes, connectors and accessories that you are using with the device.

Non-Warranty Service: Please go to the support and service section on our website at bkprecision.com to obtain an RMA #. Return the product in the original packaging to the address below. Clearly state on the RMA the performance problem and return any leads, probes, connectors and accessories that you are using with the device. Customers not on an open account must include payment in the form of a money order or credit card. For the most current repair charges please refer to the service and support section on our website.
Return all merchandise to B&K Precision Corp. with prepaid shipping. The flat-rate repair charge for Non-Warranty Service does not include return shipping. Return shipping to locations in North America is included for Warranty Service. For overnight shipments and non-North American shipping fees please contact B&K Precision Corp.

Include with the returned instrument your complete return shipping address, contact name, phone number and description of problem.

B&K Precision Corp.
22820 Savi Ranch Parkway
Yorba Linda, CA 92887
bkprecision.com
714-921-9095

LIMITED THREE-YEAR WARRANTY

B&K Precision Corp. warrants to the original purchaser that its products and the component parts thereof, will be free from defects in workmanship and materials for a period of **three years** from date of purchase. B&K Precision Corp. will, without charge, repair or replace, at its option, defective product or component parts. Returned product must be accompanied by proof of the purchase date in the form of a sales receipt.

To help us better serve you, please complete the warranty registration for your new instrument via our website www.bkprecision.com

Exclusions: This warranty does not apply in the event of misuse or abuse of the product or as a result of unauthorized alterations or repairs. The warranty is void if the serial number is altered, defaced or removed.

B&K Precision Corp. shall not be liable for any consequential damages, including without limitation damages resulting from loss of use. Some states do not allow limitations of incidental or consequential damages. So the above limitation or exclusion may not apply to you.

This warranty gives you specific rights and you may have other rights, which vary from state-to-state.

B&K Precision Corp.
22820 Savi Ranch Parkway
Yorba Linda, CA 92887
www.bkprecision.com
714-921-9095

Version: May 28, 2024